Air Driven Hydraulic Pumps, Gas Boosters, Power Units, Specialty Valves & Accessories

High Pressure Equipment

Sprague® Products

TABLE OF CONTENTS

Page

SPRAGUE PRODUCTS AIR DRIVEN HYDRAULIC PUMPS FEATURES & BENEFITS 3

HOW THE S-216-J AIR DRIVEN PUMP WORKS 4

TYPICAL CIRCUITS 5

HOW TO ORDER PUMPS-MODEL PART NUMBER CODING 6

PUMP RATIO SELECTION CHART 7

S-216-J STANDARD HYDRAULIC PUMP 8

HYDRAULIC POWER UNITS 10

HIGH PRESSURE HAND PUMP 11

NON-CONTAMINATING PUMPS 12

AIR DRIVEN, DOUBLE-ACTING HYDRAULIC PUMPS 14

AIR DRIVEN, DOUBLE-ACTING HYDRAULIC POWER UNITS 16

S-218-GJC PUMP 17

HOW SPRAGUE PRODUCTS GAS BOOSTERS WORK 19

GAS BOOSTER SELECTION 21

GAS BOOSTERS 23

GAS BOOSTER POWER UNITS 24

OVERHAUL KITS 25

SPECIALTY VALVES 27

ACCESSORIES 29

GENERAL INFORMATION 31

SPRAGUE PRODUCTS AIR DRIVEN HYDRAULIC PUMPS

A variety of hydraulic pumps is offered for various liquid output pressure up to 33,500 psi (2311 bar). Sprague Products pumps service water, oil and most corrosive chemicals, and are rugged, service-proven and virtually maintenance-free.

The Sprague Products positive-displacement type pump converts air inlet pressure to hydraulic output pressure. The pump uses low pressure air to act on a large area piston to produce high hydraulic pressure with a small area piston.

In operation, the pump reciprocates rapidly until the system liquid pressure nears the desired level, then slows to a stop when the liquid pressure equals or balances the air pressure. This liquid-air pressure balance is maintained indefinitely in a holding condition with minimal energy consumption and with no increase in fluid temperature or parts movement.

In contrast, a motor driven pump in a holding condition must continue to operate to maintain a pressure level. Excess liquid must be bypassed or recirculated back to the reservoir, resulting in energy loss, heat build-up, and the need for bypass components and a larger reservoir.

The Sprague Products pump is efficient in operation and simple in design. Compared to other types of hydraulic pumps, it provides cost effective and energy saving benefits for many industrial and research applications.

HYDROSTATIC TESTING APPLICATIONS

The Sprague Products air driven pump offers economical advantages for the pressure testing of hoses, pipes, valves, fittings and other hydraulic vessels and products. The time-saving and performance advantages offered by these pumps allow routine production testing to be converted from tedious hand-pump methods to automatic and precision testing methods.

PRODUCTION MACHINERY APPLICATIONS

The Sprague Products air driven pump delivers high pressure liquids required by production machinery for holding, clamping, forming, shearing, punching, etc. An application example: a hydraulic press where long holding cycles are necessary or where the work stroke is short and a high force is required. High and low volume pumps can be combined to produce a combination of high speed and high force at low cost.

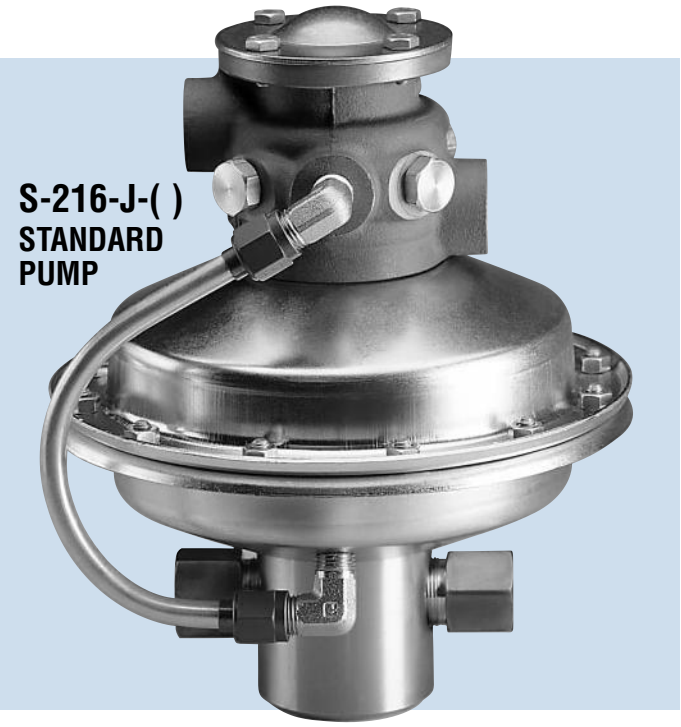

NO NEED FOR CENTRAL POWER SOURCE

Because Sprague Products air driven pumps are relatively small, they can be installed directly on individual machines or test equipment in separate locations as direct power sources. Pumps so mounted eliminate need for a central power system, long plumbing runs and excess hydraulic power capacity.

SAFE OPERATION

Unlike motor driven pumps, Sprague Products air driven pumps are non-arcing and non-sparking, and can be used safely in hazardous or confined areas.

SIMPLER MAINTENANCE

When compared to other air driven pumps, Sprague Products pumps do the same job, but with fewer parts and seals for simpler maintenance.

HOW THE S-216-J AIR DRIVEN PUMP WORKS

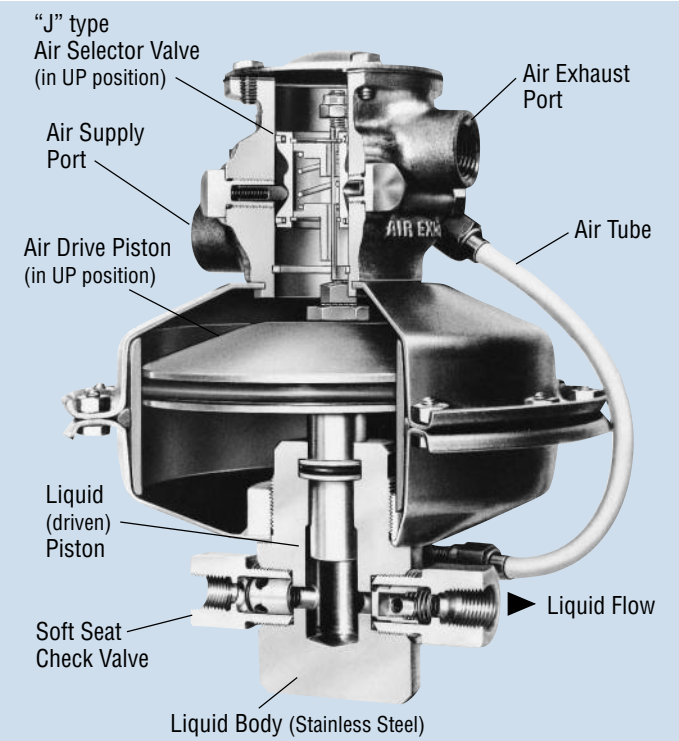

PUMP AIR PISTON IN UP POSITION

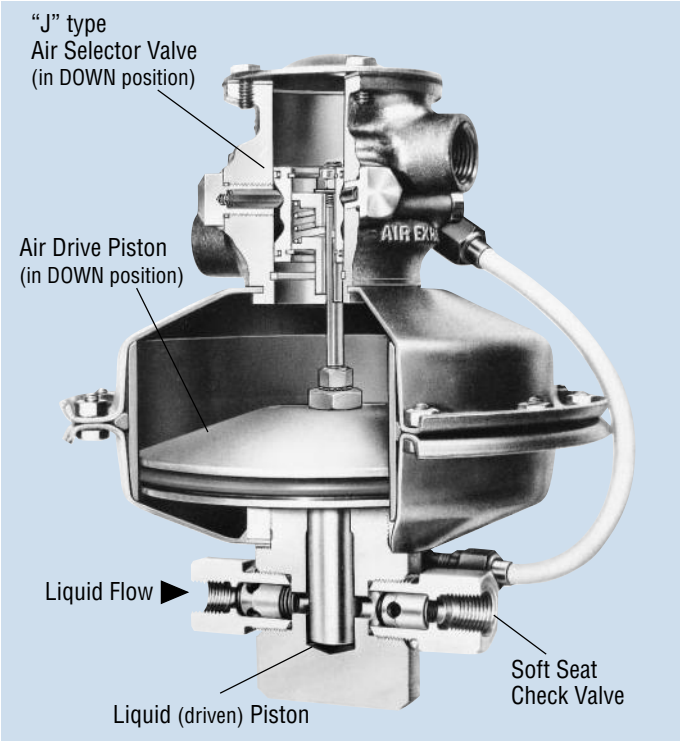

PUMP AIR PISTON IN DOWN POSITION

HOW THE PUMP WORKS

The Sprague Products pump develops high output pressures by applying the principle of differential areas. The pump has a large area air piston, air driven at low pressures. This air piston drives a small area liquid piston that in turn pumps liquids at high pressures.

The liquid output pressure is determined by the ratio between the area of the air drive piston, the area of the liquid driven piston and the applied operating air pressure.

The area relationship of the air piston to the liquid piston is referred to as the pump ratio. This pump ratio is indicated in the dash number which follows the pump model basic number.

Example: S-216-J-10 pump has an approximate ratio of 10 to 1 or 10 psi liquid pressure for each 1 psi of operating air pressure

In operation, an S-216-J-10 pump using 100 psi of input air pressure will produce a maximum liquid output pressure of 1000 psi; 80 psi air will produce an output pressure of 800 psi; 60 psi air . . . 600 psi output, and 40 psi air . . . 400 psi output.

By regulating the incoming air supply at the pressure regulator, the liquid output can be infinitely adjusted through the pump's pressure range.

WETTED SECTION MATERIALS

The materials used in the wetted section of the Sprague Products basic pump are compatible to most liquids to be serviced. Pump components and materials include:

Liquid Body	303 Stainless steel
Liquid (driven) Piston	416 Stainless steel chrome plated
Piston O-ring	Nitrile
Piston Back-up Ring	Teflon® or equivalent compound
Check Valve Body	416 Stainless steel
Check Valve Poppet	17-4ph Stainless steel
Check Valve Spring	302 Stainless steel
Check Valve Seal	Nitrile

ACCESSORIES

For optimum efficiency, certain accessories are recommended for use with pump. Noise can be dampened by installing muffler at pump's air exhaust port. For "J" type lubricated pumps, install an air control unit (filter, pressure regulator with air gauge and lubricator) in the supply line. For "JN" type non-lubricated pumps and boosters, install an air control unit (without lubricator) in the air supply line. These and other related accessory items are available from Sprague Products.

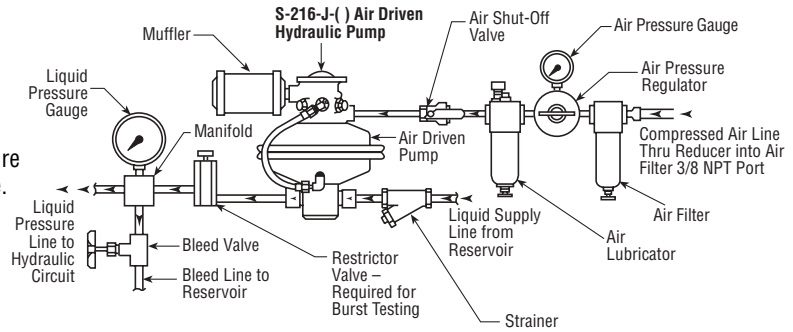

PUMP AND ACCESSORIES — TYPICAL ARRANGEMENT

Teflon is a registered trademark of the DuPont Company

TYPICAL CIRCUITS FOR SPRAGUE PRODUCTS AIR DRIVEN HYDRAULIC PUMPS

TYPICAL SET-UP FOR HYDRAULIC SWAGING AND CRIMPING PRESS

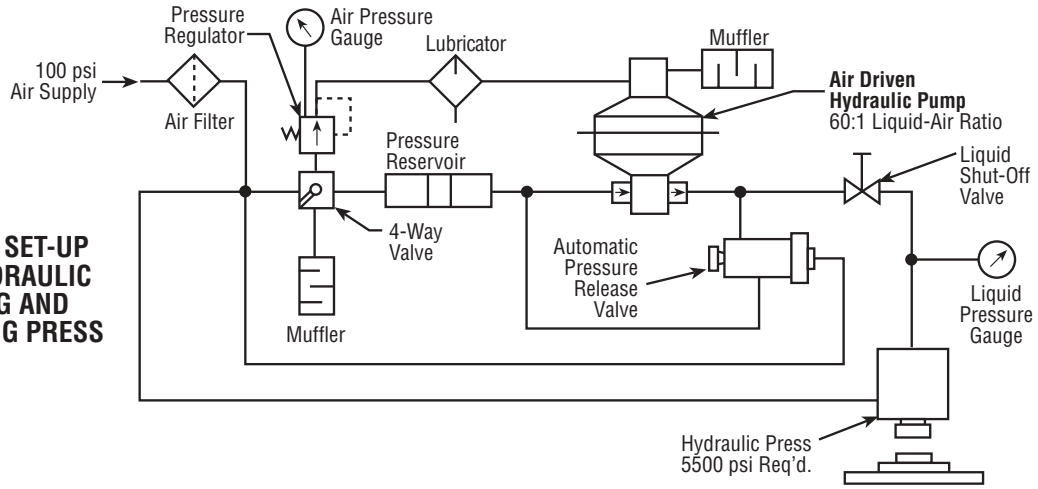

TYPICAL PUMP SET-UP FOR HYDROSTATIC TEST

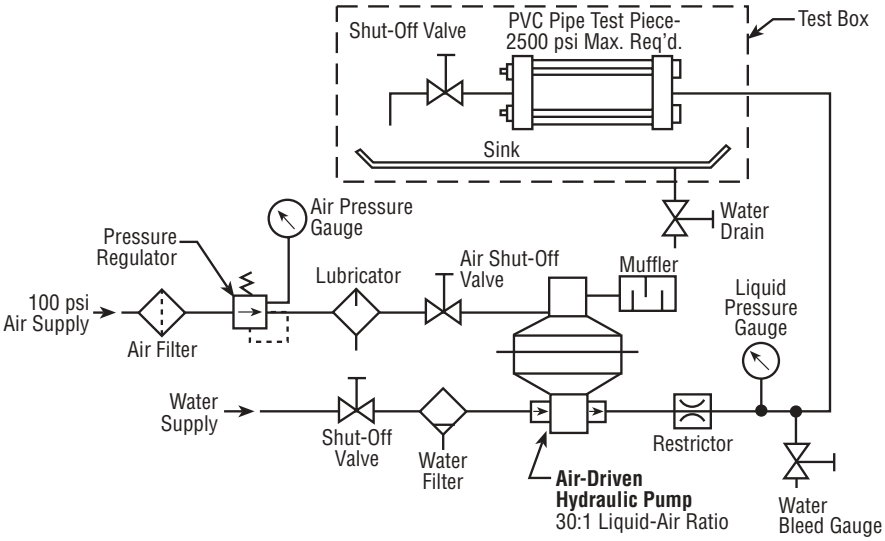

HIGH-LOW PUMP SYSTEM FOR MOLDING PRESS

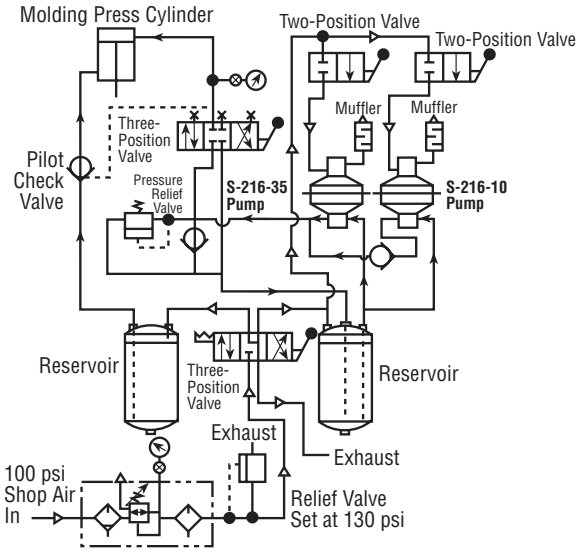

HOW TO ORDER PUMPS - MODEL PART NUMBER CODING

MODEL PART NUMBER CODING

The letter "S" preceding the basic part number refers to the manufacturer's name, Sprague Products. The letter or letters following the part number refer to the model configuration. These letters include:

J	=	Standard, lubricated air
JN	=	Standard, non-lubricated air
JD	=	Double-acting, lubricated air
JDN	=	Double-acting, non-lubricated air
JR	=	Standard with reservoir, lubricated air
JNR	=	Standard with reservoir, non-lubricated air
JS	=	Non-contaminating, separated, lubricated air
JSN	=	Non-contaminating, separated, non-lubricated air
S	=	De-ionized water service, lubricated air
SN	=	De-ionized water service, non-lubricated air
GJC	=	S-218 pumps

The dash number following the configuration letter or letters refers to the pump or booster nominal pump ratio.
Example: S-216-J-60 = 60:1 pump nominal ratio.

Use this pump ratio number as a dash number and add it to the end of the pump model number:

S-216-J-60

Standard Part Number — Pump Nominal Ratio (60:1)

When ordering, specify the quantity required and the liquid service. The standard S-216-J pump has a stainless steel (at no added cost) liquid body and is furnished with nitrile O-rings.

Sprague Products pumps can be furnished with other O-ring materials: Viton®, Neoprene, EPR and other compounds. For questions regarding liquid/seal compatibility, contact Sprague Products for recommendations for the seal compound suited to the application.

Also, when ordering, specify operating temperature range (if known) and any other special conditions applicable.

The "GJC" letter combination is part of the S-218-GJC-( ) pump basic part number. The dash number, -45 or -65, refers to the pump nominal ratio. **Example:**

S-218-GJC-45

Standard Part Number — Pump Nominal Ratio (45:1)

HOW TO ORDER PUMPS

To order a hydraulic pump or power unit, the nominal ratio of the pump must be determined. Knowing the liquid pressure and flow requirements of the application as well as the available air pressure to operate the pump, refer to the Pump Ratio Selection Charts on page 7.

As an example, if the air supply is 100 psi and system requirement is for 1000 psi liquid discharge pressure with a 170 cubic inch per minute flow rate or capacity, the pump nominal ratio indicated on the Chart will be 60:1.

Selection of the "-60" pump means that by adjusting the driving air supply at the pressure regulator, the pump will develop any adjusted liquid output pressure ranging anywhere between 1500 psi and 6100 psi.

PUMPS FOR FREON® SERVICE

Sprague Products pumps can be ordered with minor modifications from the factory to service most liquid Freon refrigerants, solvents and fire extinguishing agents. Suitable seals, compatible to these liquids, are installed in the liquid body and in the inlet and outlet check valves. The pump may require other minor modifications.

When ordering a pump for this special service, specify the exact Dupont designation to be used (i.e., 12, 22, etc.) or the specific designations of other liquids.

Viton is a registered trademark of DuPont Dow Elastomers
Freon is a registered trademark of the DuPont Company

PUMP RATIO SELECTION CHART

for the following pump models: S-216-J, S-216-JN, S-216-JS, and S-216-JSN

100 psi Driving Air Supply

NOM. RATIO	MAXIMUM OUTPUT PRESSURE	DISPLACE-MENT PER STROKE CU. IN.	LIQUID DISCHARGE PRESSURE - psi															
			0	250	500	750	1000	1500	2000	2500	3000	4000	5000	7500	10M	15M	20M	30M
			Capacities - Cubic Inches Per Minute Approximate															
10:1	1000	3.26	485	560	484	324												
20:1	1850	1.75	485	440	400	364	320	212										
30:1	3100	1.04	332	284	268	256	236	208	174	125	42							
35:1	4600	.708	297	238	225	214	200	185	164	142	122	69						
60:1	6100	.527	213	190	186	177	170	154	140	123	107	86	60					
100:1	8800	.366	172	138	132	128	126	118	111	106	98	88	76	53				
125:1	12500	.266	130	122	115	112	110	104	99	94	88	85	75	57	40			
150:1	16000	.205	78	77	76	74	72	68	66	63	60	56	53	44	38	20		
200:1	23750	.132	53	52	50	49	48	47	46	45	43	41	38	34	30	20	9	
300:1	33500	.092	37	36	35	34	33	33	32	31	30	30	29	26	23	18	14	6

NOMINAL PERFORMANCE (BASED ON OPERATING AIR SUPPLY OF 50 STANDARD CUBIC FEET PER MINUTE @ 100 psi)

6.9 bar Driving Air Supply **METRIC SCALE (equivalent to 100 psi Driving Air Supply)**

NOM. RATIO	V MAXIMUM OUTPUT PRESSURE	LIQUID DISCHARGE PRESSURE - bar															
		0	17	34	48	69	103	138	172	207	276	345	517	689	1034	1379	2068
		Capacities - Liters Per Minute Approximate															
10:1	69	7.9	9.1	7.5	5.3												
20:1	128	7.9	7.2	6.6	6	5.2	3.5										
30:1	214	5.4	4.7	4.4	4.2	3.9	3.4	2.9	2	.7							
35:1	317	4.9	3.9	3.7	3.5	3.3	3	2.7	2.3	2	1.1						
60.1	420	3.5	3.1	3	2.9	2.8	2.5	2.3	2	1.8	1.4	1					
100:1	607	2.8	2.3	2.2	2.1	2.0	1.9	1.8	1.7	1.6	1.4	1.2	.9				
125:1	862	2.1	2.0	1.7	1.8	1.8	1.7	1.6	1.5	1.4	1.3	1.2	.9	.7			
150:1	1103	1.3	1.3	1.2	1.2	1.2	1.1	1.1	1	1	.9	.9	.7	.6	.3		
200:1	1637	.9	.9	.8	.8	.8	.8	.8	.7	.7	.7	.6	.6	.5	.3	.15	
300:1	2310	.6	.6	.6	.6	.5	.5	.5	.5	.5	.5	.5	.4	.4	.3	.2	.1

NOMINAL PERFORMANCE (BASED ON 1.4 STD. CU. METERS OF DRIVING AIR AT 6.9 bar)

High Pressure Connections

All pumps that are capable of pressures exceeding 10,000 psi are equipped with 9/16-18 NBS outlet check valves that accept coned and threaded tube fittings.

NOTE: *See page 30 for additional H.P. connections.*

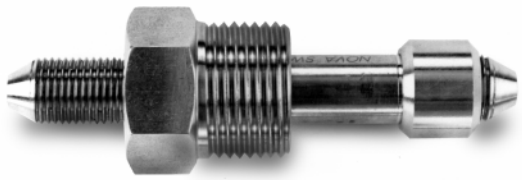

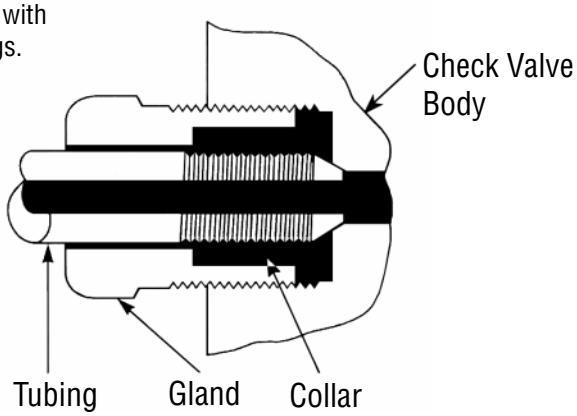

THE S-216-J STANDARD HYDRAULIC PUMP

and S-216-JN Non-Lubricated Pump

S-216-J-( ) STANDARD PUMP, LUBRICATED

This general use, air driven pump produces medium to high liquid pressures and services oil, water and compatible chemicals.

The Model S-216-J standard pump is offered in ten ratios (area of large air piston to area of small liquid piston) ranging from the 10:1 ratio pump which develops up to 1000 psi (69 bar) to the 300:1 ratio which develops up to 33,500 psi (2311 bar). By regulating the driving air pressure, the pump's liquid output can be adjusted through its pressure range.

The pump's wetted section components are stainless steel, compatible with most non-abrasive liquids.

Being air driven, the pump is safe for use in hazardous areas.

The S-216-J standard pump requires lubricated driving air to lubricate the pump's dynamic air seals and other internal parts within the air portion of the pump.

When determining the appropriate pump nominal ratio to order, refer to page 6, How To Order Pumps and Pump Ratio Selection Chart.

Example: S-216-J-60

Pump Model Number — Pump Nominal Ratio

S-216-J

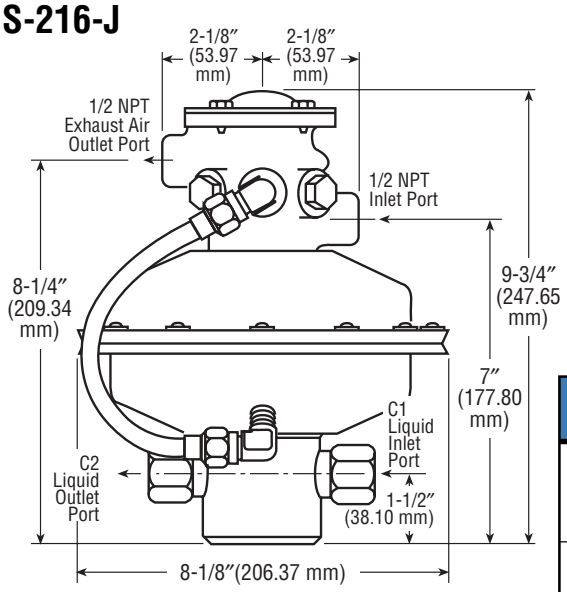

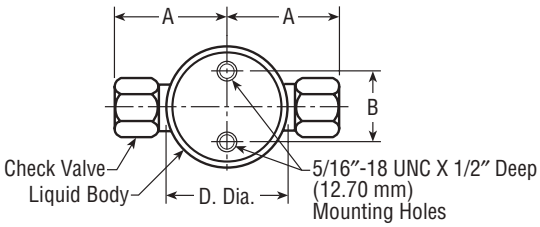

Nominal Ratio	A Inch	A mm	B Inch	B mm	C1 Inlet	C2 Outlet	D/Dia. Inch	D/Dia. mm
10:1	2-29/32	73.82	2-7/16	61.90	3/8 NPT	3/8 NPT	3.1/2	88.86
20:1	2-29/32	73.82	2-7/16	61.90	3/8 NPT	3/8 NPT	3-1/4	82.51
30:1	2-29/32	73.82	2-7/16	61.90	3/8 NPT	3/8 NPT	3-1/4	82.51
35:1	2-1/4	57.15	1-1/2	38.10	3/8 NPT	3/8 NPT	2-1/2	63.47
60:1	2-1/4	57.15	1-1/2	38.10	3/8 NPT	3/8 NPT	2-1/2	63.47
100:1	2-1/4	57.15	1-1/2	38.10	3/8 NPT	3/8 NPT	2-1/2	63.47
125:1	2-1/4	57.15	1-1/2	38.10	1/4 NPT	9/16-18 NBS	2-1/2	63.47
150:1	2-1/4	57.15	1-1/2	38.10	1/4 NPT	9/16-18 NBS	2-1/2	63.47
200:1	2-1/4	57.15	1-1/2	38.10	1/4 NPT	9/16-18 NBS	2-1/2	63.47
300:1	2-1/4	57.15	1-1/2	38.10	1/4 NPT	9/16-18 NBS	2-1/2	63.47

Pump Model No.	Reference Number	Maximum Output - See Note psi	bar	Port Threads Driving Air	Liquid Inlet	Outlet	Actual Weight lbs.-oz.	kg	Shipping Weight lbs.-oz.	kg
S-216-J-10 S-216-JN-10	79293-11 89842-11	1000	69	1/2 NPT	3/8 NPT	3/8 NPT	16-4	7.4	19	8.6
S-216-JR-10 S-216-JNR-10	91612-11 91613-11	1000	69	1/2 NPT	3/8 NPT	3/8 NPT	24-4	11.0	27-4	12.
S-216-J-20 S-216-JN-20	77894-11 89842-21	1860	128	1/2 NPT	3/8 NPT	3/8 NPT	14-8	6.6	17	7.7
S-216-JR-20 S-216-JNR-20	91612-21 91613-21	1860	128	1/2 NPT	3/8 NPT	3/8 NPT	22-8	10.2	25-8	11.6
S-216-J-30 S-216-JN-30	77894-21 89842-31	3100	214	1/2 NPT	3/8 NPT	3/8 NPT	14-8	6.6	17	7.7
S-216-JR-30 S-216-JNR-30	91612-31 91613-31	3100	214	1/2 NPT	3/8 NPT	3/8 NPT	22-8	10.2	25-8	11.6
S-216-J-35 S-216-JN-35	77895-81 89842-41	4600	317	1/2 NPT	3/8 NPT	3/8 NPT	12-8	5.7	15	6.8
S-216-JR-35 S-216-JNR-35	91612-41 91613-41	4600	317	1/2 NPT	3/8 NPT	3/8 NPT	20-8	9.3	23-8	10.7
S-216-J-60 S-216-JN-60	77895-11 89842-51	6100	420	1/2 NPT	3/8 NPT	3/8 NPT	12-8	5.7	15	6.8
S-216-JR-60 S-216-JNR-60	91612-51 91613-51	6100	420	1/2 NPT	3/8 NPT	3/8 NPT	20-8	9.3	23-8	10.7
S-216-J-100 S-216-JN-100	77895-21 89842-61	8800	607	1/2 NPT	3/8 NPT	3/8 NPT	12-8	5.7	15	6.8
S-216-JR-100 S-216-JNR-100	91612-61 91613-61	8800	607	1/2 NPT	3/8 NPT	3/8 NPT	20-8	9.3	23-8	10.7
S-216-J-125 S-216-JN-125	77895-61001 89842-01001	12500	862	1/2 NPT	1/4 NPT	9/16-18 NBS	12-8	5.7	15	6.8
S-216-JR-125 S-216-JNR-125	90612-01001 91613-01001	12500	862	1/2 NPT	1/4 NPT	9/16-18 NBS	12-8	5.7	15	6.8
S-216-J-150 S-216-JN-150	77895-31001 89842-71001	16,000	1103	1/2 NPT	1/4 NPT	9/16-18 NBS	12-8	5.7	15	6.8
S-216-JR-150 S-216-JNR-150	91612-71001 91613-71001	16,000	1103	1/2 NPT	1/4 NPT	9/16-18 NBS	20-8	9.3	23-8	10.7
S-216-J-200 S-216-JN-200	77985-41001 89842-81001	23,750	1637	1/2 NPT	1/4 NPT	9/16-18 NBS	12-8	5.7	15	6.8
S-216-JR-200 S-216-JNR-200	91612-81001 91613-81001	23,750	1637	1/2 NPT	1/4 NPT	9/16-18 NBS	20-8	9.3	23-8	10.7
S-216-J-300 S-216-JN-300	77985-51001 89842-91001	33,500	2310	1/2 NPT	1/4 NPT	9/16-18 NBS	12-8	5.7	15	6.8
S-216-JR-300 S-216-JNR-300	91612-91001 91613-91001	33,500	2310	1/2 NPT	1/4 NPT	9/16-18 NBS	20-8	9.3	23-8	10.7

NOTE: -125 ratios also offered with 3/8 NPT liquid connections for working pressures under 10,000 psi.

NOTE: *Pump maximum output pressure is based on 100 psi (6.9 bar) driving air pressure.*

S-216-JN-( ) STANDARD PUMP, NON-LUBRICATED

Mechanically the same as the S-216-J standard pump, this S-216-JN-( ) pump is suitable for use in cleanrooms or laboratories. The pump uses normal shop compressed air without lubrication to actuate the pump. Its dynamic air seals are self-lubricating. The pump's exhaust air is identical to the driving air supply, so no additional contaminants are added to the exhaust air. Order in the same manner as the S-216-J and add an "N" to model number.

Example: S-216-JN-60

Pump Model Number — Pump Nominal Ratio

S-216-J-( )HO HIGH OUTPUT PUMP, LUBRICATED S-216-JN-( )HO HIGH OUTPUT PUMP, NON-LUBRICATED

Mechanically the same as the S-216-J-( ) or S-216-JN-( ) pumps, the S-216-( )-( )HO pumps utilize larger air passageways to dramatically increase pump speeds. Flows of up to double the standard published flow rates are available with the high output pumps.

S-216-JR-( ) STANDARD PUMP/RESERVOIR, LUBRICATED

This pump assembly combines the S-216-J standard pump (lubricated air type) with a one-gallon (3.8 liters) steel reservoir. Readily adaptable to portable power pack use or suitable for stationary use to provide hydraulic power for production machinery or for hydrostatic testing. Available in ten pump ratios.

S-216-JNR-( ) PUMP/RESERVOIR, NON-LUBRICATED

Same as S-216-JR-( ) assembly except that the S-216-JN-( ) standard pump (non-lubricated air type) is used. No additional contaminants are exhausted from the pump. Available in ten pump ratios.

HYDRAULIC POWER UNITS

equipped with reservoirs

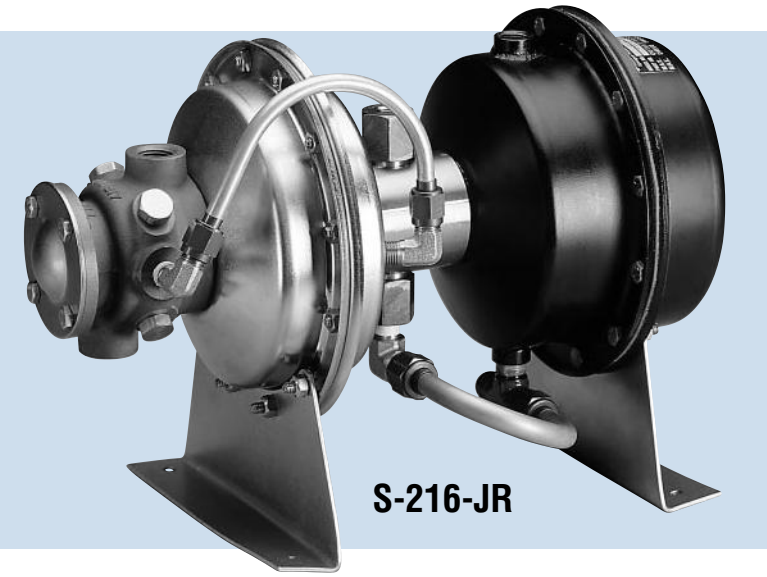

S-216-JR-( ) STANDARD PUMP/RESERVOIR. LUBRICATED (*FOR OIL SERVICE ONLY*)

This pump assembly combines the S-216-J standard pump (lubricated air type) with a one-gallon (3.8 liters) steel reservoir. Readily adaptable to portable power pack use. Also suitable for stationary use to provide hydraulic power for production machinery or for hydrostatic testing. This unit is not available in 150:1, 200:1 or 300:1 ratios.

S-216-JNR-( ) PUMP/RESERVOIR. NON-LUBRICATED (*FOR OIL SERVICE ONLY*)

Same as S-216-JR-() assembly except that the S-216-JN () standard pump (non-lubricated air type) is used. No additional contaminants are exhausted from the pump.

S-216-JR NOMINAL DIMENSIONS AND CLEARANCES

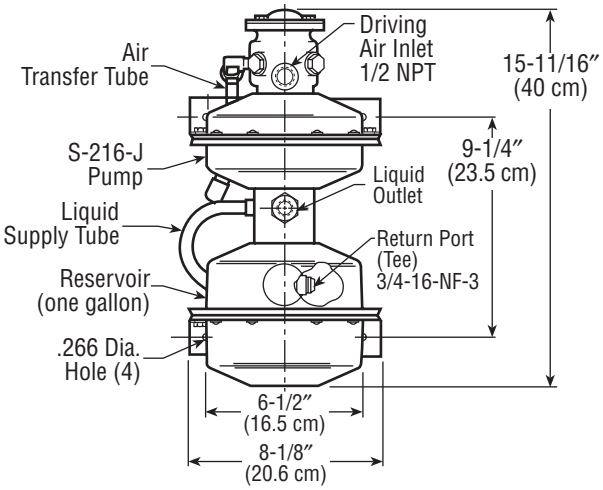

View Looking Down at Pump/Reservoir

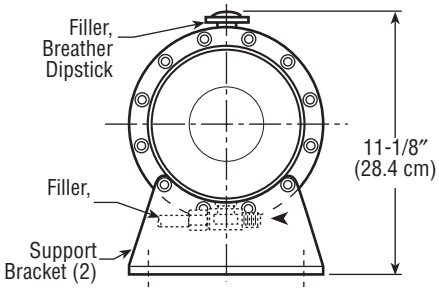

Reservoir End View

S-440-JR-( ) COMPACT POWER UNIT WITH RESERVOIR (*FOR OIL SERVICE ONLY*)

This compact, lightweight, hydraulic power unit with reservoir weighs less than 33 pounds and is ideal for pressurizing small hydraulic clamps, cylinders and hydrostatic testing.

The unit comes complete with the S-216-J-( ) basic pump (available in six popular pressure ratios), air filter, pressure regulator and lubricator (FRL), air shut-off valve, muffler, manifold, liquid bleed valve, air pressure gauge, liquid pressure gauge and one gallon reservoir with dipstick. This unit is not available in 150:1, 200:1 or 300:1 ratios.

S-440-JNR-( ) COMPACT POWER UNIT WITH RESERVOIR, NON-LUBRICATED

This power unit with reservoir is the same as the S-440-JR-( ) except that it utilizes the S-216-JN-( ) non-lubricated pump and the lubricator is removed from the FRL.

HIGH PRESSURE HAND PUMP

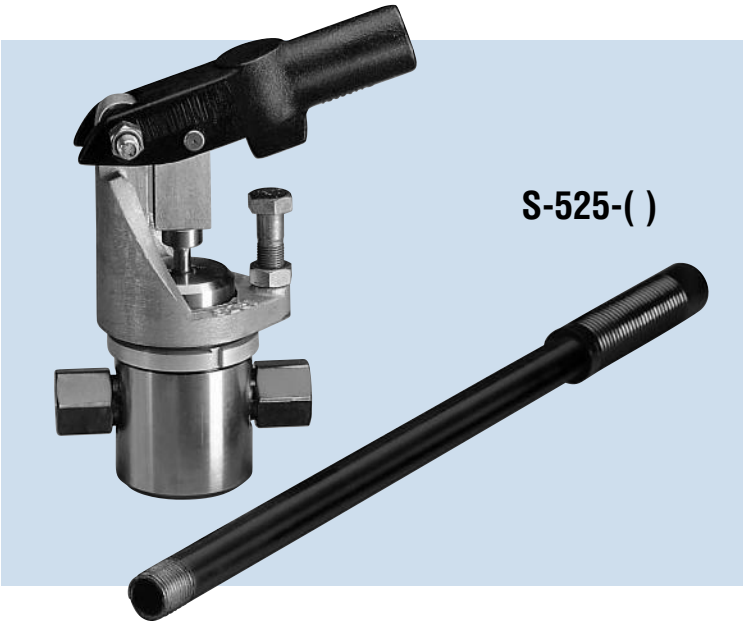

HIGH PRESSURE HAND PUMP

S-525-( )—This single-acting, piston type hand pump is ideal for hydrostatic testing and other industrial applications that require low volumes at high pressures.

The pump's stainless steel liquid body assembly (wetted section) is identical to and interchangeable with the liquid body assembly in the S-216-J-( ) standard pump, so the hand pump will service water, oil and most corrosive chemicals.

Directional control of the liquid through the pump is maintained through the inlet and outlet soft seat, zero leakage, check valves.

The pump is seven inches high from its base to the top of the pumping mechanism. The handle extends twenty-four inches and is furnished with a rubber grip.

The pump has two threaded mounting holes provided on the underside of the liquid body. The -35, -60 and -100 pumps may be installed below or no more than two feet above the liquid source. The -150, -200 and -300 pumps must be installed with the pump inlet below the liquid source.

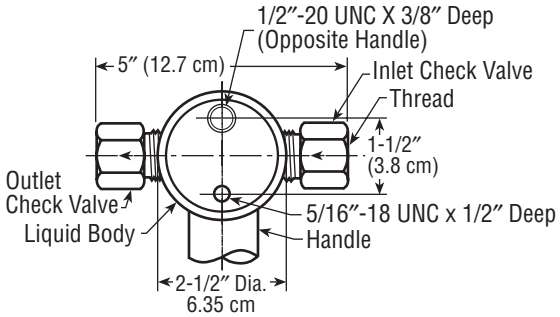

Mounting Dimension
Bottom View

Hand Pump Model Number	Pump Output with 75 lbs. Handle Load	Liquid Inlet	Liquid Outlet	Shipping Weight	Displacement cu. in.
S-525-35	2220 psi	3/8 NPT	3/8 NPT	12 lbs.	.708
S-525-60	3020 psi	3/8 NPT	3/8 NPT	12 lbs.	.527
S-525-100	4350 psi	3/8 NPT	3/8 NPT	12 lbs.	.366
S-525-150	6800 psi	1/4 NPT	9/16-18 NBS	12 lbs.	.205
S-525-200	12000 psi	1/4 NPT	9/16-18 NBS	12 lbs.	.132
S-525-300	17400 psi	1/4 NPT	9/16-18 NBS	12 lbs.	.092

NON-CONTAMINATING PUMPS

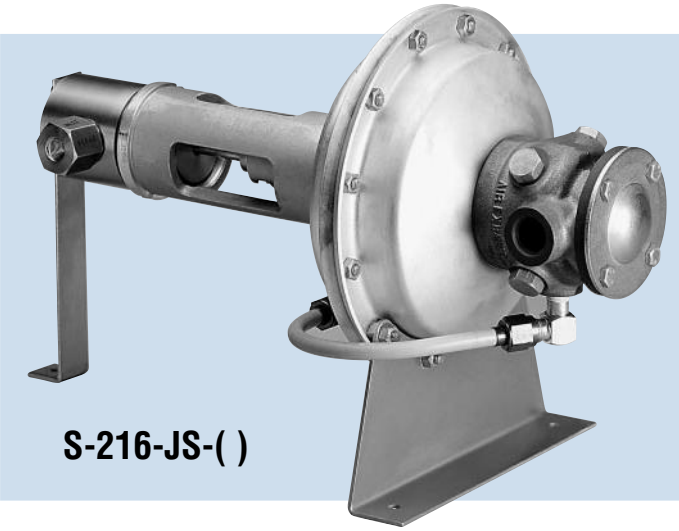

	S-216-JS-( )	S-216-JSN-( )
Length:	16-1/4 in. (41.3 cm)	16-1/4 in. (41.3 cm)
Width:	8-1/4 in. (21.0 cm)	8-1/4 in. (21.0 cm)
Height:	9 in. (22.8 cm)	9 in. (22.8 cm)
Shipping Weight: -10, -20, -30	39 lbs. (17.7 kg)	39 lbs. (17.7 kg)
-35 thru -300	36 lbs. (16.3 kg)	36 lbs. (16.3 kg)

S-216-JS-( )—The design feature of this "JS" type pump is the mechanical separation of the liquid portion from the air driven portion of the pump. This allows the pump to service contaminate-free fluids or fluids for human consumption.

Other applications may include liquids for food processing, liquids for atomic energy use, proof testing of pressure vessels such as oxygen and nitrogen bottles, injecting corrosive inhibitors into pipe lines or for other specialized uses.

The mechanical separation prevents undesirable elements or contaminates, normally present in compressed air or lubricants, from contacting the contaminate-free liquid being pumped. The separation also permits removal of the stainless steel liquid body (same body as S-216-J pump) for service or substitution with optional liquid bodies and liquid pistons to change the rated output pressure without disturbing the pump's driving side. Refer to the Pump Ratio Selection Charts, page 7.

Like the "J" type basic pump, this "JS" pump uses lubricated driving air for the air driven portion of the pump. Mounting brackets are included as part of the pump assembly.

S-216-JSN-( )—This pump is suitable for cleanroom or laboratory use. It has the same mechanical separation features as the model S-216-JS pump. Additionally, the "JSN" pump uses clean, dry air; thus no contaminates are added to the pump's exhaust air. The air section of the pump has self-lubricating seals.

Pump Model Number	Reference Number	Pump Maximum Output (see Note)		Ports		
		psi	bar	Driving Air	Liquid Inlet	Liquid Outlet
S-216-JS-10 S-216-JSN-10	79557-21 90067-11	1000	69	1/2 NPT	3/8 NPT	3/8 NPT
S-216-JS-20 S-216-JSN-20	77896-61 90067-21	1850	128	1/2 NPT	3/8 NPT	3/8 NPT
S-216-JS-30 S-216-JSN-30	77896-71 90067-31	3100	214	1/2 NPT	3/8 NPT	3/8 NPT
S-216-JS-35 S-216-JSN-35	77896-81 90067-41	4600	317	1/2 NPT	3/8 NPT	3/8 NPT
S-216-JS-60 S-216-JSN-60	77896-11 90067-51	6100	420	1/2 NPT	3/8 NPT	3/8 NPT
S-216-JS-100 S-216-JSN-100	77896-21 90067-61	8800	607	1/2 NPT	3/8 NPT	3/8 NPT
S-216-JS-125 S-216-JSN-125	77896-91001 90067-01001	12500	862	1/2 NPT	1/4 NPT	9/16-18 NBS
S-216-JS-150 S-216-JSN-150	77896-31001 90067-71001	16000	1103	1/2 NPT	1/4 NPT	9/16-18 NBS
S-216-JS-200 S-216-JSN-200	77896-41001 90067-81001	23750	1637	1/2 NPT	1/4 NPT	9/16-18 NBS
S-216-JS-300 S-216-JSN-300	77896-51001 90067-91001	33500	2310	1/2 NPT	1/4 NPT	9/16-18 NBS

NOTE: *Pump maximum output pressures at 100 psi (6.9 bar) input driving air. For lower input driving air pressures, refer to Pump Ratio Selection Chart, page 7.*

NOTE: *-125 ratios also offered with 3/8 NPT liquid connections for working pressures under 10,000 psi.*

NON-CONTAMINATING PUMPS AND POWER UNITS

NON-CONTAMINATING POWER UNITS

S-440-JS-( )—This contaminate-free hydraulic power unit uses the S-216-JS-( ) pump. The unit's components include an air filter, pressure regulator and lubricator (FRL), air shut-off valve, muffler, manifold, liquid bleed valve, air pressure gauge and liquid pressure gauge. The base is steel and has four mounting holes. All components in contact with the liquid being pumped are stainless steel.

NOTE: S-440-JS-10 thru -125 only (pumps with NPT liquid ports)

	S-440-JS-( )SS
Length:	23-7/16 in. (59.8 cm)
Width:	11-7/16 in. (29.4 cm)
Height:	12 in. (30.5 cm)
Filter Air Inlet Port Threads:	3/8 NPT
Pump Liquid Outlet S-440-JS-10 thru 100	3/8 NPT
Shipping Weight: S-440-JS-10 thru -30	39 lbs. (17.7 kg)
S-440 JS-35 thru -125	36 lbs. (16.3 kg)
Reference: S-440-JS-( )	79546-11 thru -61

NON-CONTAMINATING PUMPS FOR DE-IONIZED LIQUIDS

S-216-S-( )—This non-contaminating, hydraulic pump is designed for use with mildly corrosive liquids and distilled, de-ionized or Grade A pure water. These liquids will not be contaminated by lubricated air in the driving portion of the pump.

The liquid body portion of the pump contains a special dynamic seal system which assures long service life of the pump. This seal system compensates for the low lubricity of de-ionized type liquids.

Like the S-216-JS type "separated" pump, page 12, this "S" model pump offers a mechanical separation of the liquid and air-driving portions of the pump. This separation feature simplifies the removal of the liquid body for service or change without disturbing the air driving portion of the pump. It uses lubricated driving air.

The "S" type separated pump is offered in three pressure ratios: 35:1, 60:1 and 100:1. These ratios will produce maximum liquid outlet pressures of 4600, 6100 and 10,000 psi respectively, using 100 psi driving air supply.

S-216-SN-( )—This non-contaminating pump is suited for cleanroom or laboratory use. It services mildly corrosive liquids and distilled, de-ionized or Grade A pure water. Pump is the same as model S-216-S-( ) except that it uses clean, dry, driving air, so no contaminates are added to the pump's exhaust air. The air section of the pump has self-lubricating seals.

	S-216-SN-( )
Length:	17-1/4 in. (43.8 cm)
Width:	8-1/4 in. (21.0 cm)
Height:	9 in. (22.8 cm)
Shipping Weight:	25 lbs. (11.3 kg)
Reference Numbers: S-216-S-35, -60 and -100	88844-11, -31 and -21
S-216-SN-35, -60 and -100	90199-11, -31 and -21

AIR DRIVEN, DOUBLE-ACTING HYDRAULIC PUMPS

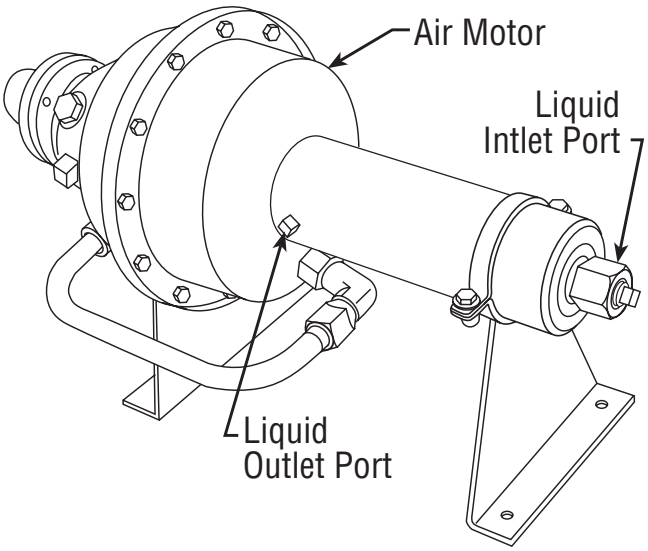

These Sprague Products hydraulic pumps move relatively large flows of liquids at low to moderate pressures. The pumps deliver liquid with each up and down stroke of the liquid piston rather than, like other pumps, pump only with a down stroke. The pump's air-driving action is the same as the Sprague Products air driven S-216-J series hydraulic pumps described on page 3. Being air driven, these double-acting pumps are non-arcing and non-sparking, safe for use in hazardous or confined areas.

See Charts on page 15 for liquid discharge rates and pressures.

See page 16 for power unit arrangements of these pump models.

S-216-JD-6.8—Services oil, liquid refrigerants and non-corrosive liquids. ***Not for water service.*** With a 6.8 pumping ratio, this double-acting pump is well suited for liquid transfer, low pressure hydrostatic testing and other industrial uses.

This pump discharges volume liquids up to 12 gallons per minute and provides for selected discharge pressures up to 680 psi.

With its liquid body and main components made from aluminum alloy and hard coated, the pump is reduced in weight and lower in cost. The standard pump's special seals in the wetted section are compatible with a wide range of chemicals while other seals in the pump are nitrile. Other seal compounds are optional.

	S-216-JD-6.8
Height:	8.3 in. (21.08 cm)
Length:	15.75 in. (40.01 cm)
Width:	8.0 in (20.32 cm)
Shipping Weight:	19.5 lbs. (8.85 kg)
Reference:	90615

S-216-JD-34—Services oil, water and many corrosive liquids. With a 34 to 1 pumping ratio, this double-acting pump discharges volume liquids at any selected pressure up to 3400 psi, suitable to many industrial applications requiring volume liquid delivery at higher pressures and holding cycles.

This pump uses an internal check valve in its liquid piston head, to obtain a double-acting, steady flow of liquid. This unique design results in higher pressures and uses material resistant to many corrosive liquids. The pump has special dynamic seals to accommodate low lubricity liquids. The pump body is brass.

Mounting brackets facilitate installation.

S-216-JD-36—Services oil and non-corrosive liquids. ***Not for water service.*** Its general design is identical to the S-216-JD-34 pump described above. The -36 pump has an aluminum body which significantly lowers the price of the pump and reduces its weight by four pounds. The pump has nitrile seals.

	S-216-JD-34	S-216-JD-36
Height:	10-1/4 in. (26.0 cm)	10-1/4 in. (26.0 cm)
Length:	20-1/4 in. (51.4 cm)	20-1/4 in. (51.4 cm)
Diameter:	8-1/8 in. (21.6 cm)	8-1/8 in. (21.6 cm)
Shipping Weight:	27 lbs. (12.2 kg)	23 lbs. (10.4 kg)
Reference:	89320-1	81557-20

S-216-JD-60—Services petroleum or water-based hydraulic liquids.

With a 60 to 1 pump ratio, this double-acting pump is well-suited for hydrostatic testing, powering hydraulically actuated tools and other industrial uses. Smooth flow of liquid is achieved by double-stroke action of the pump. It uses lubricated driving air.

Standard pump has nitrile seals. Other seal compounds such as Neoprene, Viton and EPR are available.

S-216-JDN-60—Non-contaminating pump for cleanroom or laboratory use has self-lubricating dynamic seals. The pump uses clean, dry driving air.

	S-216-JD-60	S-216-JDN-60
Height:	10-1/2 in. (26.7 cm)	10-1/2 in. (26.7 cm)
Length:	20-3/4 in. (52.7 cm)	20-3/4 in. (52.7 cm)
Width:	8-1/8 in. (20.6 cm)	8-1/8 in. (20.6 cm)
Shipping Weight:	23-1/2 lbs. (10.66 kg)	23-1/2 lbs. (10.66 kg)
Reference:	90977-2	91616

Pump Model Number	Displacement per cycle (Cu. inch)	DISCHARGE CAPACITY–gallons per minute, approximate, based on 50 SCFM* of driving air at 100 psi										
		Discharge Pressure - psi										
		0	100	250	350	500	1000	2000	3000	4000	5000	6000
S-216-JD-6.8	9.72	12.0	10.9	8.6	7.0	4.0						
S-216-JD-34	4.90	3.1	2.95	—	2.9	2.85	2.7	2.1	1.1			
S-216-JD-36	4.90	2.9	—	2.1	—	1.98	1.74	1.23	0.6			
S-216-JD-60*	2.82	—	—	—	—	2.23	2.10	1.84	1.44	1.07	0.71	0.14

*Discharge capacity of S-216-JD-60 is based on 85 SCFM of driving air at 100 psi

Pump Model Number	Displacement per cycle (liters)	DISCHARGE CAPACITY–liters per minute, approximate, based on 1.4 cubic meters* per minute of driving air at 6.9 bar										
		Discharge Pressure-bars										
		0	6.9	17.2	24.1	34.5	69	138	207	275	345	414
S-216-JD-6.8	0.159	45.1	41.3	32.5	26.5	15.1						
S-216-JD-34	0.080	11.7	11.1	—	10.9	10.8	10.2	7.9	4.2			
S-216-JD-36	0.080	11.0	—	7.9	—	7.5	6.6	4.7	2.3			
S-216-JD-60*	0.462	—	—	—	—	8.44	7.95	6.96	5.45	4.05	2.69	0.53

*Discharge capacity of S-216-JD-60 is based on 2.41 cubic meters per minute of driving air at 6.9 bar.

AIR DRIVEN, DOUBLE-ACTING HYDRAULIC POWER UNITS

Like the Sprague Products complete power units, described on page 10, these "JD" power units are assembled with compatible accessories, ready for portable power supply or for stationary use within a hydraulic system.

The "JD" power units include the selected type "JD" pump, see pages 14 and 15, air filter, pressure regulator, liquid and air pressure gauges, air lubricator, valves, fittings and mounting base.

S-440-JD-6.8 Services oil, liquid refrigerants, many corrosive chemicals and low lubricity liquids.

	S-440-JD-6.8
Length:	20 in. (58.4 cm)
Width:	11 in. (27.9 cm)
Height:	13-1/2 in. (34.3 cm)
Filter Air Inlet Port Threads:	1/2 NPT
Liquid Inlet Port:	1 NPT
Liquid Outlet Port:	1/2 NPT
Liquid Bypass Port:	1/4 NPT
Shipping Weight:	42.5 lbs. (19.3 kg)
Reference:	90763-11

S-440-JD-34 Services oil, water and many corrosive liquids.

S-440-JD-36 Services oil and non-corrosive liquids. ***Not for water service.***

	S-440-JD-34	S-440-JD-36
Length:	23 in. (58.4 cm)	23 in. (58.4 cm)
Width:	11 in. (27.9 cm)	11 in. (27.9 cm)
Height:	12-1/2 in. (31.8 cm)	12-1/2 in. (31.8 cm)
Filter Air Inlet Port Threads:	3/8 NPT	3/8 NPT
Liquid Inlet Port Threads:	3/8 NPT	3/8 NPT
Liquid Outlet Port Threads:	1/4 NPT	1/4 NPT
Shipping Weight:	52 lbs. (23.6 kg)	44 lbs. (21.8 kg)
Reference:	90029-11	90822-11

S-440-JD-60 Uses lubricated driving air. Services petroleum or water based hydraulic fluids.

S-440-JDN-60 Uses clean, dry driving air. For cleanroom or laboratory use.

	S-440-JD-60	S-440-JDN-60
Length:	23 in. (58.4 cm)	23 in. (58.4 cm)
Width:	11 in. (27.9 cm)	11 in. (27.9 cm)
Height:	12-1/2 in. (31.8 cm)	12-1/2 in. (31.8 cm)
Filter Air Inlet Port Threads:	3/8 NPT	3/8 NPT
Liquid Inlet Port Threads:	3/8 NPT	3/8 NPT
Liquid Outlet Port Threads:	1/4 NPT	1/4 NPT
Shipping Weight:	48 lbs. (21.8 kg)	47 lbs. (21.3 kg)
Reference:	91614	91615

S-218-GJC PUMP

Pump Performance (Nominal)

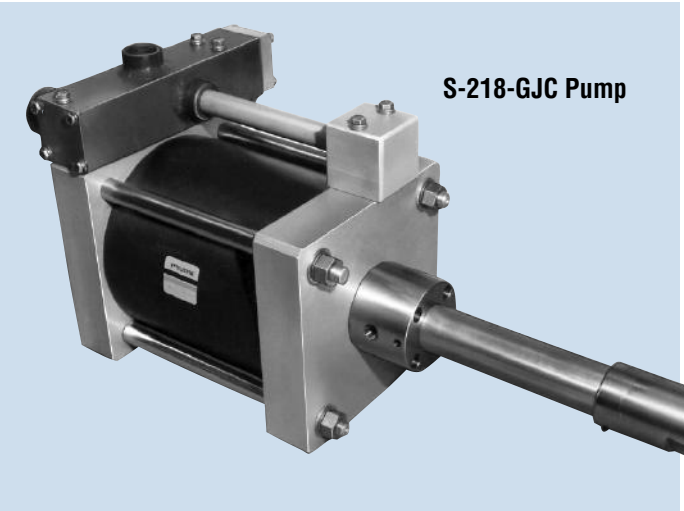

S-218-GJC-( )—This 10.5 hp, double-acting piston pump services oil, water and compatible chemicals. It is ideal for hydrostatic testing, machine operations, charging accumulators and for deep-hole applications.

Offered in three pumping ratios (45:1, 65:1 and 200:1), the S-218 pump produces medium to high pressures for controlled flow or for holding pressures. By regulating the air supply, liquid outlet pressure can be infinitely adjusted throughout the pump's pressure range.

Being air-driven, the pump is safe for use in hazardous areas. It can be used in a wide variety of temperatures and in other hostile environments. The standard pump uses a lubricated driving air supply.

Other features:
Pumps rapidly to desired pressure. Holds pressure indefinitely with minimal energy consumption, no increase in liquid temperature or parts movement. Automatically restarts to restore pressure balance when imbalance occurs.

Liquid pumping section materials are stainless steel and chrome-plated steel, both compatible with most non-abrasive liquids.

Air motor has water emitters to prevent water from collecting in humid conditions.

Can be driven with wellhead gases. Can operate in freezing or hostile conditions because of anti-icing device.

Safe for use in hazardous conditions because there are no electrical sparking problems or electrical connections.

S-218-GJC-45

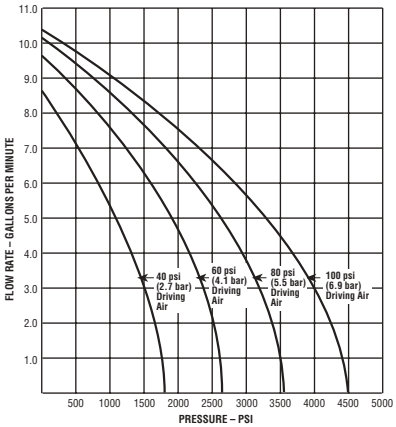

S-218-GJC-65

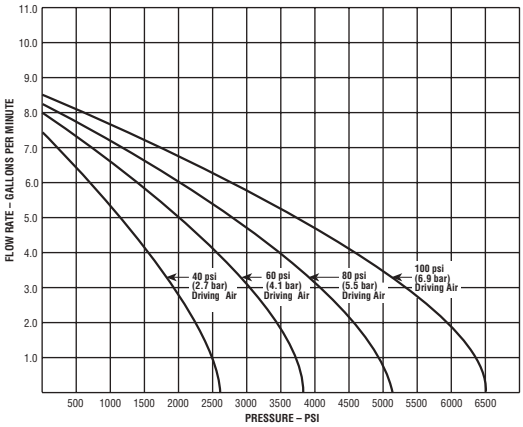

Model Numbers	S-218-GJC Pumps (45 & 65)
Length:	29 in. (73.6 cm)
Width:	10-5/8 in. (27.0 cm)
Height:	12-1/2 in. (31.8 cm)
Air Inlet Port:	1 NPT
Liquid Inlet Port:	1 NPT
Liquid Outlet Port:	1/2 NPT
Shipping Weight:	85 lbs. (38.6 kg)
Reference: -45 -65 -200	 90226-1 90225-1

DISCHARGE CAPACITY—GALLONS (liters) PER MINUTE—APPROXIMATE
Based on 350 SCFM of driving air at 100 psi (9.9 Std. Cu. Meters driving air at 6.9 bars)

Pump Model No.	DISCHARGE PRESSURE 0 psi (0 bar)	500 psi (34.5 bar)	1000 psi (69 bar)	2000 psi (138 bar)	3000 psi (207 bar)	4000 psi (276 bar)	4500 psi (310 bar)	5000 psi (345 bar)	5500 psi (379.5 bar)	6000 psi (414 bar)
S-218-GJC-45 (45:1 ratio)	10.5 gal (39.7)	9.8 (37.1)	9.2 (34.8)	7.7 (29.1)	5.8 (22.0)	3.1 (11.7)	—	—	—	—
S-218-GJC-65 (65:1 ratio)	8.5 (32.2)	8.0 (30.3)	7.6 (28.8)	6.6 (25.0)	5.6 (21.2)	4.5 (17.0)	3.9 (14.8)	3.3 (12.5)	2.7 (10.2)	1.9 (7.2)

S-218-200D SERIES PUMP

single acting

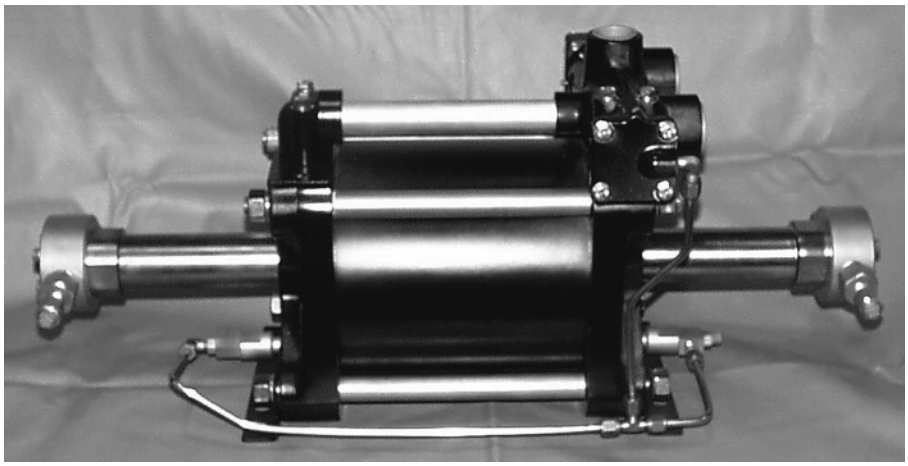

S-218-200D DOUBLE ENDED, SINGLE ACTING, AIR-DRIVEN HYDRAULIC PUMP

The TR/S S-218-200D air-driven, double ended pump produces high pressure liquid flows up to 2-1/2 gallons per minute and pressures up to 20,000 psig.

The pump services water, oil and compatible chemicals.

Features
Has fewer moving parts and seals tha comparable pumps...thus les maintenance. Safe for use in hazardous areas...no electrical connections.

Pump ideal for hydrostatic testing or watter jetting applications.

DISCHARGE CAPACITY—CUBIC INCHES (liters) PER MINUTE—APPROXIMATE Based on 350 SCFM of driving air at 100 psi (9.9 Std. Cu. Meters driving air at 6.9 bars)						
	DISCHARGE PRESSURE					
Pump Model No.	0 psi (0 bar)	4000 psi (276 bar)	8000 psi (552 bar)	12000 psi (828 bar)	16000 psi (1104 bar)	20000 psi (1380 bar)
S-218-200D (200:1 ratio)	525 (8.60)	510 (8.36)	470 (7.70)	375 (6.15)	230 (3.77)	—

S-218-200D

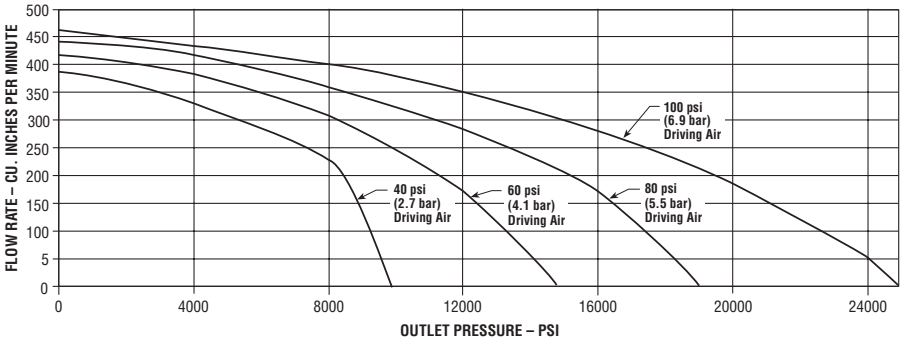

Model Numbers	S-218-GJC Pump (200D)
Length:	28.5 in. (72.4 cm)
Width:	10-5/8 in. (27.0 cm)
Height:	12-1/2 in. (31.8 cm)
Air Inlet Port:	1 NPT
Liquid Inlet Port:	1/2 NPT
Liquid Outlet Port:	9/16-18 NBS (3/8 in. OD)
Shipping Weight:	85 lbs. (38.6 kg)
Reference: -45 -65 -200	94024-217

SUPERCHARGE SHOP AIR OR BOTTLED GAS WITH SPRAGUE PRODUCTS GAS BOOSTER

Sprague Products pneumatic boosters offer a cost effective way to compress shop air or bottled gas to meet various requirements for higher pressure, lower volume air or gas.

Industrial applications include charging accumulators, inflating high pressure tires or charging shock struts from lower pressure supply sources, the transferring of gas from a supply cylinder to another container or the actuating of air chucks in machine tools. Where production machinery or test set-ups require higher air pressures than normally provided by the shop air system, Sprague Products boosters can provide the extra muscle needed to operate the equipment.

The Sprague Products booster can be installed as a component or can be supplied as a complete, ready-to-use power package. Use of the Sprague Products booster power unit eliminates the need to develop the basic power supply circuit, the time to select and buy the needed accessories, and the time required to test and troubleshoot the circuit.

Because of their compact size and low cost, Sprague Products boosters can be combined in high-low combinations to meet higher flow and pressure requirements.

Being air driven and having no electrical connections, Sprague Products pneumatic boosters are non-sparking. These boosters can be used safely in the presence of flammable or explosive liquids or vapors.

Sprague Products boosters and other Sprague Products pneumatic products are designed to a 4 to 1 minimum safety factor.

A variety of Sprague Products boosters have been developed to convert precharge low gas pressures to higher gas pressures. These Sprague Products booster models and their features are described on page 23 and 24.

HOW THE SPRAGUE PRODUCTS BOOSTERS WORK

The Sprague Products gas booster is a piston-type, air-operated booster. It uses a mechanically operated, snap-action air selector valve to cycle the booster.

The Sprague Products boosters, like Sprague Product air driven hydraulic pumps, employ the piston differential areas principle—a large area air piston, driven at low air pressure to drive a small area compression piston which converts input gas to higher pressure, lower volume output gas.

The booster gas output or discharge pressure developed by the compression piston is determined by the ratio between the area of the air piston, the operating air pressure and the available precharge pressure. The function of the precharge pressure to the booster is to charge the high pressure cylinder inside the booster with gas, reducing the time required to reach higher pressures, and the time to return the compression piston and the air piston for the next compression cycle.

The Sprague Products booster works rapidly to reach the required pressure, then stops at a pressure balance. The booster will hold the pressure balance indefinitely with minimal energy consumption, heat build-up or parts movement. When a pressure imbalance occurs, the booster will automatically restart to restore the pressure balance.

By using a pressure regulator on the operating air supply line, the outlet gas pressure can be accurately adjusted to any pressure level between the precharge pressure and the maximum discharge pressure.

With some Sprague Products booster models, the pumping or high pressure section is cooled with exhaust air piped from the air-driving section of the booster. In other boosters, the pumping section employs external fins to dissipate the heat.

Compared to other air-operated gas boosters, the Sprague Products booster does the same job but with fewer moving parts and seals for less maintenance throughout its service life.

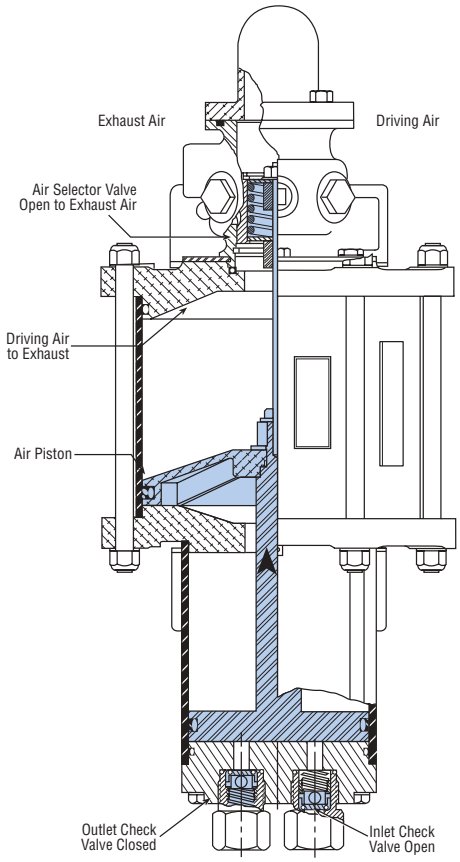

• Start of Suction Stroke

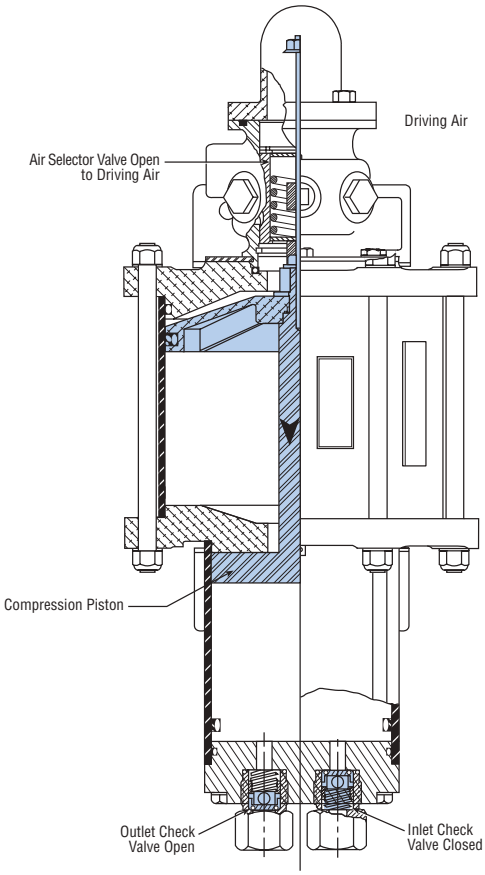

• Start of Compression Stroke

GAS BOOSTER ACCESSORIES

To compress shop air or bottled gas to higher pressures, Sprague Products boosters are combined with accessories to provide complete circuits as shown below.

An air control unit and shut-off valve are installed in the driving air side of booster. Noise is dampened with a muffler. An air filter (10 micron) is recommended in the gas precharge line. On the gas discharge side, a pressure gauge, shut-off and bleed valves are installed.

For convenience, boosters combined with compatible accessories can be obtained as complete, ready-to-use power units.

BOOSTERS AND ACCESSORIES—TYPICAL ARRANGEMENTS

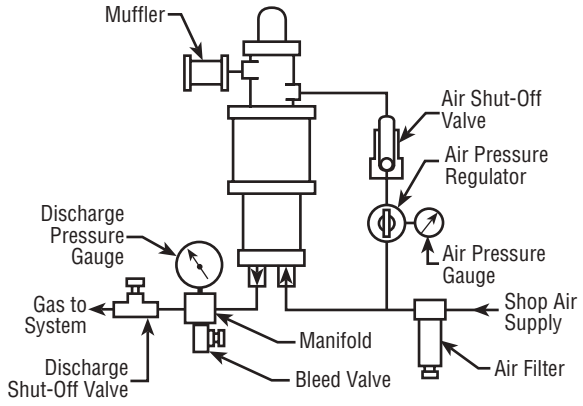

SINGLE AIR SOURCE
• Non-lubricated shop air to driving side and to gas inlet of booster.

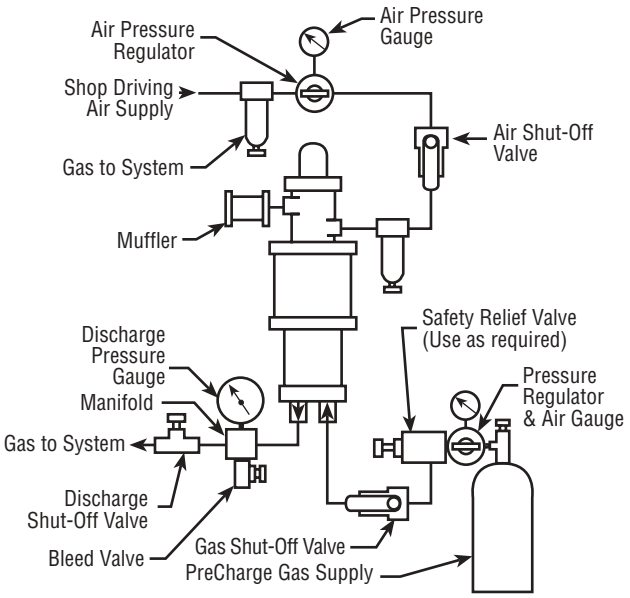

DUAL SOURCE AIR/GAS SOURCES
• Precharge gas supply to gas inlet of booster.

GAS BOOSTER SELECTION

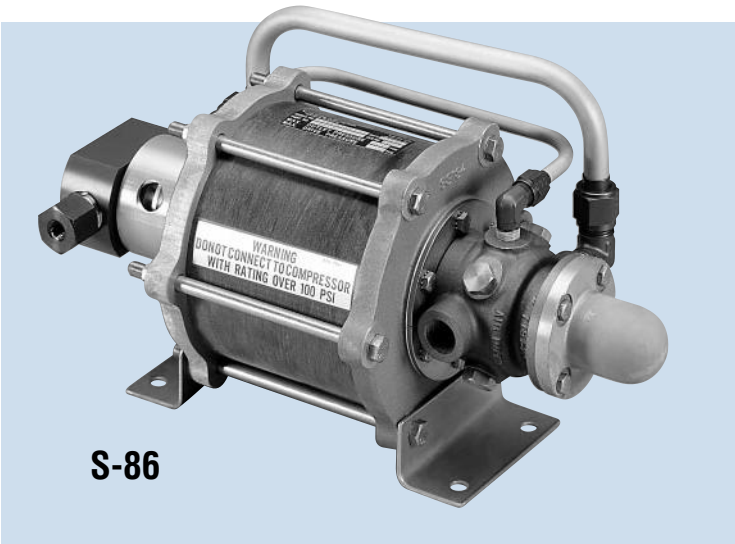

In general, an air or gas charging application requires a specific volume to be brought to a specific pressure within a given amount of time. The adjacent Tables will assist you in selecting the most efficient ratio Sprague Products booster for your application requirements.

A typical hose pressure testing application:

a. Hose with one cubic foot volume is to be pressure tested at 500 psig. Pressure level is to be reached in three minutes. Available shop air is 150 psi.

b. Using Table 1, Low Pressure Gas Boosters Performance, page 22, find the required receiver pressure of 500 psi. Compare the figures found in the 500 psi discharge pressure column to the desired time of three minutes. The column figures nearest to three minutes is 2 minutes, 45 seconds with a discharge rate of 4.4 standard cubic feet per minute. So, the 5:1 ratio booster will do this job more efficiently than a 15:1 ratio booster.

c. Note that the booster driving air pressure and above calculations are based on 100 psi, so the shop air pressure of 150 psi must be reduced to 100 psi driving air to operate the booster. Shop air of 150 psi should still be supplied to the inlet port of the compressing portion of the booster. The higher the precharge inlet pressure, the faster the discharge outlet pressure will be reached.

d. For the above hose test, the S-86-JN-5 booster or S-486-JN-5 booster power unit could be used.

Low Pressure Booster Ratio	Precharge Inlet Air Range-psi	Outlet Air Range-psi
2:1	25-450	50-450*
5:1	50-1100	125-1100*
15:1	100-3100	375-3100*

**Based on 200 psi driving air*

High Pressure Booster Ratio	Precharge Inlet Air Range-psi	Outlet Air Range-psi
30:1	200-6000	750-6000*
60:1	300-6100	1500-6100**
100:1	500-10300	2500-10300**

**Based on 200 psi driving air.*
***Based on 100 psi driving air.*

TABLE 1, LOW PRESSURE GAS BOOSTERS PERFORMANCE (approximate performance based on air consumption of 80 SCFM)

BOOSTER RATIO	INLET PORT PRECHARGE PRESSURE-psi	OUTLET PORT PRESSURE (with 100 psi driving air)	DISCHARGE CAPACITY—Standard Cubic Feet per Minute (SCFM) DISCHARGE PRESSURE—psi										
			125	150	175	200	300	400	500	600	800	1000	1500
2:1	75	225	15.8	14.2	12.6	11.1							
	100	225		19.6	17.3	13.7							
	125	225		22.5	20.6	15.0							
5:1	50	550				4.1	3.6	2.7	1.6				
	100	550				8.7	6.8	5.2	3.0				
	150	550				13.7	11.1	8.0	4.4				
15:1	100	1550						2.2	1.9	1.7	1.4	1.2	—
	200	1550						6.5	5.7	5.2	4.5	4.1	1.1
	300	1550						10.7	9.5	8.4	6.2	5.1	1.5
	Time required in minutes/seconds to fill a one cubic foot receiver to listed Discharge Pressures RECEIVER PRESSURE—psi (one cubic foot)												
			125	150	175	200	300	400	500	600	800	1000	1500
2:1	75	225	0-12	0-19	0-27	0-38							
	100	225		0-8	0-14	0-25							
	125	225		0-5	0-8	0-17							
5:1	50	550				2-4	2-58	5-40	9-22				
	100	550				0-42	1-40	2-50	4-50				
	150	550				0-12	0-36	1-27	2-45				
15:1	100	1550						7-30	10-48	14-56	23-6	33-12	
	200	1550						1-45	2-52	4-5	6-54	9-55	20-48
	300	1550						0-31	1-18	2-8	4-0	6-16	14-28

TABLE 2, HIGH PRESSURE GAS BOOSTERS PERFORMANCE (approximate performance based on air consumption of 80 SCFM)

BOOSTER RATIO	INLET PORT PRECHARGE PRESSURE-psi	OUTLET PORT PRESSURE (with 100 psi driving air	DISCHARGE CAPACITY—Standard Cubic Inches per Minute (SCIM) DISCHARGE PRESSURE—psi											
			1000	2000	2500	2750	3000	4000	5000	6000	7000	8000	9000	10,000
30:1	Min. 200*	3000	2800	2000	1400	950								
	300	3000	5200	4200	3200	2100								
	500	3000	12500	9500	7000	3800								
60:1	Min. 300*	6100	3800	3200	3100	3050	3000	3000	2900	2000				
	500	6100	6600	6000	5900	5850	5800	5750	5700	4500				
100:1	Min. 800*	10,300					5074	5000	4800	4700	4500	4250	3800	3000
	1000	10,300					7000	6700	6600	6400	6100	5600	5000	3500
	Time required in minutes/seconds to fill a 100 cubic inch receiver to listed Discharge Pressures RECEIVER PRESSURE—psi (100 cubic inches)													
			1000	2000	2500	2750	3000	4000	5000	6000	7000	8000	9000	10,000
30:1	Min. 200*	3000	1-15	3-52	6-35	9-50								
	300	3000	0-35	1-48	2-50	4-30								
	500	3000	0-10	0-45	1-0	1-30								
60:1	Min. 300*	6100	0-53	2-54	3-32	4-30	5-7	7-24	9-18	12-20				
	500	6100	0-40	1-30	1-50	2-15	2-38	3-25	4-25	6-40				
100:1	Min. 800*	10,300					2-47	4-7	5-22	6-25	7-40	8-38	9-46	11-13
	1000	10,300					1-30	2-50	3-45	4-30	5-20	6-10	7-0	8-30

*Minimum precharge required for satisfactory operation

GAS BOOSTERS

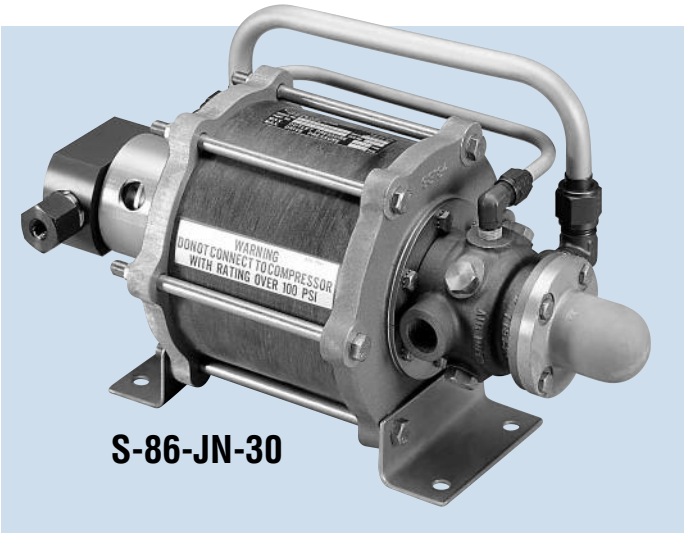

A competitively priced series of versatile gas boosters is offered in six popular design ratios: 2:1, 5:1, 15:1, 30:1, 60:1 and 100:1

These non-contaminating gas boosters are suitable for general use or for use in cleanrooms or laboratories. Since these boosters are provided with self-lubricating dynamic seals, they can be driven with clean dry air.

Being air driven, these boosters are non-sparking and safe for use in hazardous areas.

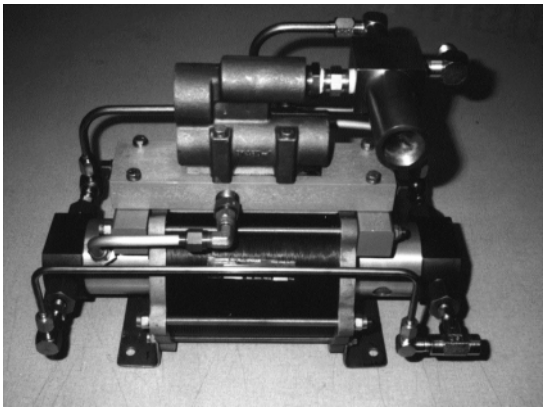

S-86-JN-30/30 (93639-11)
Used on ground support equipment and nitrogen gas charging carts.

TABLE 3, S-86-JN GAS BOOSTER PERFORMANCE AND DATA (NOMINAL)

Gas Booster or Power Unit			Driving Air Supply-psi (see Note 1)	Precharge Inlet Air Range-psi	Outlet Air Range-psi	Port Thread Size		Size				Weight			
						Driving	Inlet-Outlet	Length		Width		Actual		Shipping	
Model No.	Ref. No	Ratio				Air	Air	in.	cm	in.	cm	lbs.	kg	lbs.	kg
S-86-JN-2	88734-1	2:1	25-200	25-450	50-450	1/2 NPT	3/8 NPT	18-1/4	46.3	7-3/4	19.6	17	7.7	20	9.1
S-86-JN-5	88621-1	5:1	25-200	50-1100	125-1100	1/2 NPT	3/8 NPT	18-1/4	46.3	7-3/4	79.6	16	7.3	20	9.1
S-86-JN-15	90081-1	15:1	25-200	100-3100	375-3100	1/2 NPT	1/4 NPT	17-1/2	44.5	7-3/4	19.6	18	8.2	21	9.5
S-86-JN-30	88186-101	30:1	25-200	200-6000	750-6000	1/2 NPT	1/4 NPT	15-1/2	39.4	11-5/8	29.5	19-1/2	8.8	22	10.0
S-86-JN-60	90404-1	60:1	25-100	300-6100	1500-6100	1/2 NPT	1/4 NPT	15-7/8	40.3	11-5/8	29.5	19-1/2	8.8	22	10.0
S-86-JN-100	90036-2	100:1	25-100	500-10300 (see Note 2)	2500-10300	1/2 NPT	1/4 NPT	15-7/8	40.3	11-5/8	29.5	19-1/2	8.8	22	10.0

Notes: *1. Maximum driving air consumption of the boosters is approximately 80 SCFM @ 100 psi. Boosters will operate with less than 80 SCFM and with less than 100 psi.*

2. Minimum precharge of 800 psi is necessary to obtain a maximum output pressure of 10300 psi.

GAS BOOSTER POWER UNITS

Assembled, ready-to-use gas booster power units are suitable for general use or for cleanroom or laboratory use. The power units can be used within portable power supply circuits or stationary pneumatic circuits.

Being air driven, the power units are non-sparking and safe for use in hazardous areas.

The power unit assembly includes an S-86-JN-( ) type booster, air filter, air pressure regulator, air gauges, driving air shut-off and bleed valves, high pressure manifold fitting and muffler.

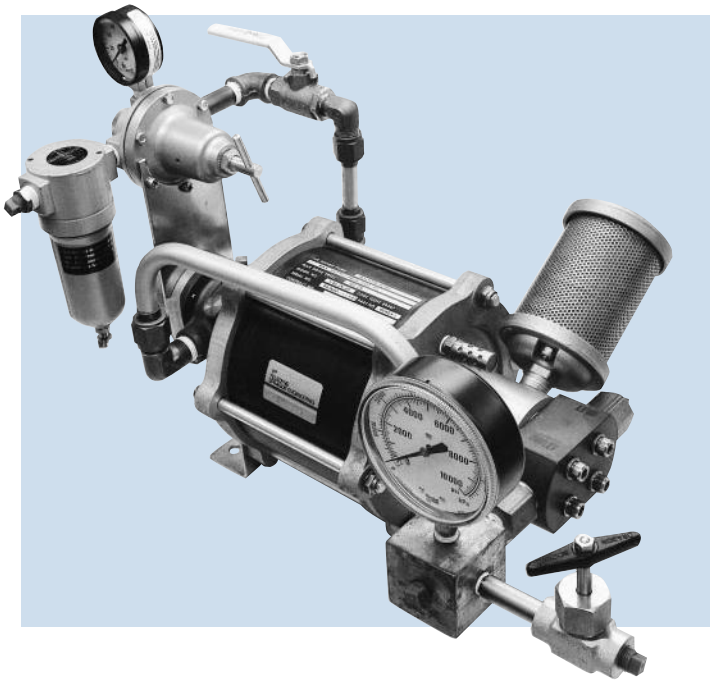

Table 4, S-486-JN GAS BOOSTER POWER UNITS DATA (NOMINAL)

Gas Booster Power Unit		Ratio	Gas Booster used in power unit	Port Thread Size		Length		Size Width		Height		Weight			
				Driving	Inlet-Outlet							Actual		Shipping	
Model No.	Ref. No.			Air	Air	in.	cm	in.	cm	in.	cm	lbs.	kg	lbs.	kg
S-486-JN-2	90017-2	2:1	S-86-JN-2	3/8 NPT	3/8 NPT	23-1/2	59.7	10-3/4	27.3	13-1/2	34.3	27	12.2	33	15.0
S-486-JN-5	90017-5	5:1	S-86-JN-5	3/8 NPT	3/8 NPT	23-1/2	59.7	10-3/4	27.3	13-1/2	34.3	27	12.2	33	15.0
S-486-JN-15	90204-1	15:1	S-86-JN-15	3/8 NPT	1/4 NPT	23-7/8	60.6	9-1/2	24.1	13-1/2	34.3	26-1/4	11.9	38	17.2
S-486-JN-30	90018-1	30:1	S-86-JN-30	3/8 NPT	1/4 NPT	19-7/8	50.5	10-3/4	27.3	13-1/2	34.3	29-3/4	13.5	37	16.8
S-486-JN-60	90647-1	60:1	S-86-JN-60	3/8 NPT	See Note Below	20-3/4	52.7	10-3/4	27.3	13-1/2	34.3	30	13.6	37	16.8
S-486-JN-100	90153-1	100:1	S-86-JN-100	3/8 NPT	See Note Below	20-3/4	52.7	10-3/4	27.3	13-1/2	34.3	30	13.6	37	16.8

Note: *Inlet port: 1/4 NPT, Outlet port: 9/16-18UNF-3B (NBS port)*

OVERHAUL KITS

Overhaul Kits permit the Sprague Products pump or booster user to perform routine servicing of equipment. Or, if the user prefers, the pump or booster can be returned to a nearby Sprague Products Distributor for evaluation rather than to ship the unit directly to the factory. Many Sprague Products distributors have the capability to do the needed repair or overhaul.

Overhaul Kits contain replacement parts (for "J" pumps and boosters) such as inlet and outlet check valve components (but not the C.V. bodies), detent pins and springs, plus other springs, nuts and washers. Also included is a complete set of O-rings, backup rings and gaskets.

Overhaul Kits differ for "C" or "J" model pumps or boosters. The Kits are not interchangeable because of the differences in the "C" and "J" air valves.

STANDARD KITS

The Kits listed apply only to standard pumps and boosters with elastomeric type seals. Standard Kits seals are nitrile. Optional Kits with Neoprene, Viton and EPR seals are available.

Most of the part numbers listed below have two-digit dash numbers and offer a choice of optional standard seal materials. The first digit reflects the pump or booster ratio. The second digit indicates the seal material.

00000-X	"X" indicates ratio
00000-X1	"1" indicates Kit with nitrile seals
00000-X2	"2" indicates Kit with Neoprene seals
00000-X3	"3" indicates Kit with Viton seals
00000-X4	"4" indicates Kit with EPR seals

Example: An Overhaul Kit with Neoprene seals is needed for an S-216-J-30 pump. The standard kit listed is "90680-31". The "-3" indicates a 30:1 ratio pump. The second digit in the dash number indicates nitrile seals. Simply change the second digit "1" to "2" to indicate Neoprene seals.

The single digit dash numbers following the basic part numbers represent those Kits with nitrile seals only. No optional seal materials are offered at the present time.

SPECIAL KITS

The Kit part numbers listed DO NOT apply to pumps or boosters with modifications and/or special seals. To obtain a repair kit compatible to your modified pump or booster or to replace special seals, refer to the nameplate attached to your unit. When ordering replacement parts or seals, give model, serial and part numbers and date of manufacture, type seals already in unit and specify liquid or gas to be serviced.

Pump Model Number	Overhaul Kit Number	Pump Model Number	Overhaul Kit Number
S-216-C-10	89451-11	S-216-CN-10	89946-11
S-216-J-10	90680-11	S-216-JN-10	90712-11
S-216-C-20	89451-21	S-216-CN-20	89946-21
S-216-J-20	90680-21	S-216-JN-20	90712-21
S-216-C-30	89451-31	S-216-CN-30	89946-31
S-216-J-30	90680-31	S-216-JN-30	90712-31
S-216-C-35	89451-41	S-216-CN-35	89946-41
S-216-J-35	90680-41	S-216-JN-35	90712-41
S-216-C-60	89451-51	S-216-CN-60	89946-51
S-216-J-60	90680-51	S-216-JN-60	90712-51
S-216-C-100	89451-61	S-216-CN-100	89946-61
S-216-J-100	90680-61	S-216-JN-100	90712-61
S-216-J-125	90680-01	S-216-JN-125	90712-01
S-216-C-150	89451-71	S-216-CN-150	89946-71
S-216-J-150	90680-71	S-216-JN-150	90712-71
S-216-C-200	89451-81	S-216-CN-200	89946-81
S-216-J-200	90680-81	S-216-JN-200	90712-81
S-216-C-300	89451-91	S-216-CN-300	89946-91
S-216-J-300	90680-91	S-216-JN-300	90712-91
S-216-CS-10	89453-11	S-216-CSN-10	90811-11
S-216-JS-10	90713-11	S-216-JSN-10	90758-11
S-216-CS-20	89453-21	S-216-CSN-20	90811-21
S-216-JS-20	90713-21	S-216-JSN-20	90758-21
S-216-CS-30	89453-31	S-216-CSN-30	90811-31
S-216-JS-30	90713-31	S-216-JSN-30	90758-31
S-216-CS-35	89453-41	S-216-CSN-35	90811-41
S-216-JS-35	90679-41	S-216-JSN-35	90758-41
S-216-CS-60	89453-51	S-216-CSN-60	90811-51
S-216-JS-60	90713-51	S-216-JSN-60	90758-51
S-216-CS-100	89453-61	S-216-CSN-100	90811-61
S-216-JS-100	90713-61	S-216-JSN-100	90758-61
S-216-CS-150	89453-71	S-216-CSN-150	90811-71
S-216-JS-150	90713-71	S-216-JSN-150	90578-71
S-216-CS-200	89453-81	S-216-CSN-200	90811-81
S-216-JS-200	90713-81	S-216-JSN-200	90758-81
S-216-CS-300	89453-91	S-216-CSN-300	90811-91
S-216-JS-300	90713-91	S-216-JSN-300	90758-91

Pump Model Number	Overhaul Kit Number
S-216-J-125 (77895-61001)	90680-01001
S-216-J-150 (77895-31001)	90680-71001
S-216-JS-150 (77896-31001)	90713-71001
S-216-JN-125 (89842-01001)	90712-01001
S-216-JN-150 (89842-71001)	90712-71001
S-216-JSN-125 (90067-01001)	90758-01001
S-216-JSN-150 (90067-71001)	90758-71001

OVERHAUL KITS

Pump Model Number	Overhaul Kit Number
S-216-JD-6.8	90807-11
S-216-JDN-6.8	90809-11
S-216-CD-7	89452-71
S-216-JD-7	90679-71
S-216-CD-34	90655-11
S-216-JD-34	90714-11
S-216-CD-36	90603-11
S-216-JD-36	90716-11
S-216-JD-60	90995-11
S-216-JDN-60	93411-11
Older pumps, serial no. 1 thru 99, with "C" type air valve	
S-216-S-35	89892-11
S-216-SN-35	90823-11
S-216-S-60	89892-31
S-216-SN-60	90823-31
S-216-S-100	89892-21
S-216-SN-100	90823-21
Pumps, serial no. 100-82 and subsequent, with "J" type air valve	
S-216-S-35	90718-11
S-216-SN-35	90821-11
S-216-S-60	90718-31
S-216-SN-60	90821-31
S-216-S-100	90718-21
S-216-SN-100	90821-21
S-218-GJC-45	90448-11
S-218-GJC-65	90430-11

Seal Kits Model Number	Overhaul Kit Number
S-218-GJC-45	90447-11
S-218-GJC-65	90429-11

Gas Booster Model Number	Overhaul Kit Number
S-36-C-2	89454-11
S-36-J-2	90724-11
S-36-C-5	90158-11
S-36-J-5	90726-11
S-36-C-15	90196-11
S-36-J-15	90728-11
S-36-C-30	89779-21
S-36-J-30	90730-11
S-36-C-60	90814-11
S-36-J-60	90732-11
S-36-C-100	90343-11
S-36-J-100	90734-11
S-86-CN-2	90195-11
S-86-JN-2	90725-11
S-86-CN-5	90157-11
S-86-JN-5	90727-11
S-86-CN-15	90202-11
S-86-JN-15	90729-11
S-86-CN-30 Manufactured 10-75 and subsequent.	89779-11
S-86-CN-30 Manufactured 10-75 and prior.	89779-31
S-86-JN-30	90731-11
S-86-CN-60	90756-11
S-86-JN-60	90733-11
S-86-CN-100	90751-11
S-86-JN-100	90735-11

90711 Conversion Kit converts an S-216-C or CN series pump to an S-216-J or JN series pump regardless of manufacturing date.

Hand Pump Model Number	Overhaul Kit Number
S-525-35	90680-A1
S-525-60	90680-B1
S-525-100	90680-C1
S-525-150	90680-D1
S-525-200	90680-E1
S-525-300	90680-F1
S-525-150-1001	90680-D1001

SPECIALTY VALVES

GAUGE SAVER

For hydraulic service only.
Protects against over-pressurization of sensitive gauges, switches, other instruments and circuits. Automatically closes when pressure exceeds pre-set level; automatically opens when circuit pressure drops below setting. For hydraulic systems. Weight: Stainless Steel, 2.5 lbs. (1.15 kg). Length: 6-1/8 inches, (15.6 cm).

Standard seals are nitrile; optional seals: Neoprene, Viton and EPR.

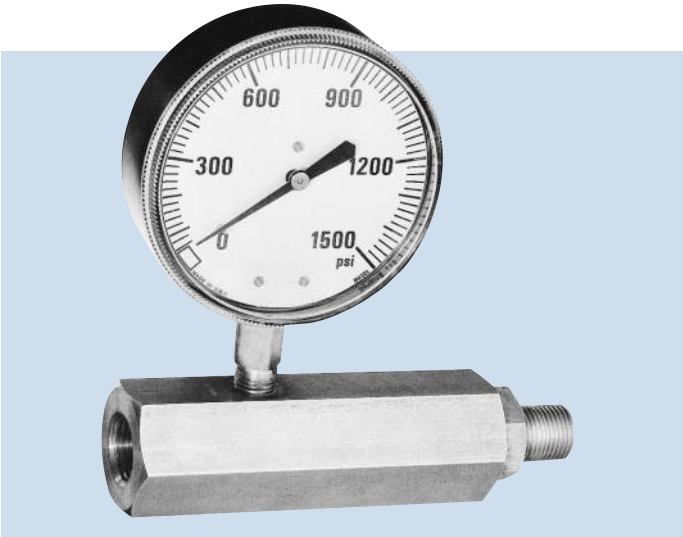

Gauge Saver Part No.	Adjustable Operating Range-psi	Body Material	Inlet Port Thread	Outlet Port Thread
75318-61	10-80	Stainless Steel	1/2 NPT	1/4 NPT
75319-61	80-300	Stainless Steel	1/2 NPT	1/4 NPT
75321-61	300-1500	Stainless Steel	1/2 NPT	1/4 NPT
75322-61	1500-2500	Stainless Steel	1/2 NPT	1/4 NPT
75323-61	2500-5000	Stainless Steel	1/2 NPT	1/4 NPT

Maximum Inlet Pressures
75318 through 75323 - 10000 psi

HIGH PRESSURE SAFETY RELIEF VALVE

For hydraulic service only.
Designed to operate at high pressures. Suitable for line or panel mounting. Infinitely adjustable within pressure range. Body material (1-5/8 in. hex): stainless steel. Standard seals are nitrile; optional seals: Neoprene, Viton and EPR.

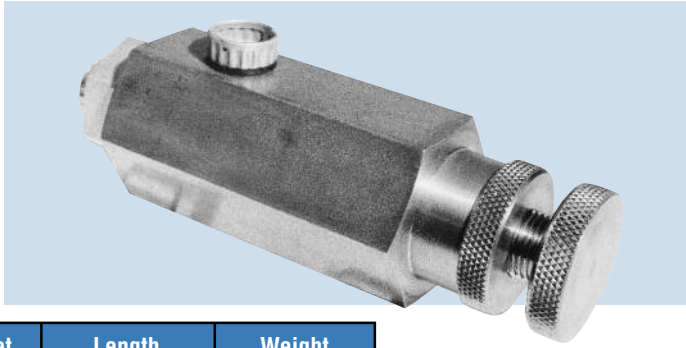

Part No.	Adjustable Range-psi	Mounting Method	Inlet Port	Outlet Port	Length		Weight	
					inch	cm	lbs.	kg
005-023C-11	10M-20M	Line	9/16-18 NBS	1/4 NPT	5-3/8	13.6	2-3/4	1.2
005-023C-31	0-4000	Line	1/4 NPT	1/4 NPT	5-3/8	13.6	2-3/4	1.2
005-023C-51	4000-10M	Line	1/4 NPT	1/4 NPT	5-3/8	13.6	2-3/4	1.2
005-023C-21	0-4000	Panel	1/4 NPT	1/4 NPT	5-3/8	13.6	2-1/2	1.2
005-023C-41	4000-10M	Panel	1/4 NPT	1/4 NPT	5-3/8	13.6	2-1/2	1.2
005-023C-61	10M-20M	Panel	9/16-18 NBS	1/4 NPT	5-3/8	13.6	2-1/2	1.2
78051-11	0-1000	Panel/Line	3/8 NPT	3/8 NPT	5-1/2	14.0	2-3/4	1.2
78051-21	5000-10M	Panel/Line	3/8 NPT	3/8 NPT	5-1/2	14.0	2-3/4	1.2
78051-31	500-5000	Panel/Line	3/8 NPT	3/8 NPT	5-1/2	14.0	2-3/4	1.2

SPECIALTY VALVES

GENERAL PURPOSE VALVES

These general purpose valves are suitable for the smooth, accurate metering or positive shutoff of air, oil, water, chemicals, vacuum, steam or liquid fuels at high or varied temperatures.

The valves can be mounted in any position or installed in-line or panel-mounted.

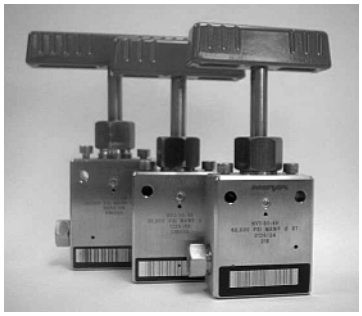

NVI-30-4H

Part No.	Operating Pressure	Type & Material	Ports	Weight Lbs.	Weight Kg
89442	10000 psi	Needle, Stain. Stl.	1/4 NPT Female	1/2	0.23
NVI-30-4H	30000 psi	Needle, Stain. Stl.	9/16-18 NBS Female	1	0.45
89443	400 psi	Ball, Brass	3/8 NPT Female	1/2	0.23

RESTRICTOR VALVE

An adjustable, flow-restricting valve for use in high pressure hydraulic fluid or water systems which are subject to sudden pressure drops. The valve is installed on the discharge side of the pump. It prevents damage to system parts in the event of a sudden drop in pressure such as occurs in hydrostatic burst testing. The valve also can be used as a snubber valve to reduce system pressure pulsations.

Components are stainless steel. Weight: 2 lbs. (0.91 kg).

Part. No.	Operating Pressure	Ports	Size
001-024-1	30000 psi	9/16-18 NBS In & Out	1-3/4 in. Hex x 3-1/4 in.
001-024-2	10000 psi	3/8 NPT	1-3/4 in. Hex x 3-1/4 in.

CHECK VALVES

Have soft-seat poppet type design, same type as used in Sprague Products S-216-J-( ) series pumps. Components are stainless steel. Standard seals are nitrile; optional: Neoprene, Viton and EPR. Weight: 1-1/4 lbs. (0.57 kg).

Part No.	Maximum Pressure	Ports	Size
88714-31	10000 psi	3/8 NPT	1-3/8 in. Hex x 2-3/4 in. 0.35 cm Hex x 7.0 cm
89393-21	30000 psi	9/16-18 NBS	1-5/8 in. Hex x 2-3/4 in. 4.1 cm Hex x 7.0 cm

*Flow coefficient.

ACCESSORIES

HIGH PRESSURE HYDRAULIC GAUGES

Dial diameter: 4 inch. Accuracy is 1% or total scale in mid-range; 1.5% in high and low ranges. Wetted parts of standard gauge stainless steel, glycerin filled. Bottom connections: -1 thru -5 are 1/4 NPT, -6 thru -9 are 9/16-18 NBS.

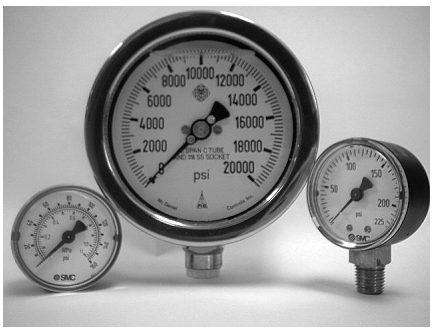

Part No.	Pressure psi	Gauge Materials
89841-1	0-1000	Stainless Steel
89841-2	0-1500	Stainless Steel
89841-3	0-3000	Stainless Steel
89841-4	0-5000	Stainless Steel
89841-5	0-10,000	Stainless Steel
89841-6	0-15,000	Stainless Steel
89841-7	0-20,000	Stainless Steel
89841-8	0-30,000	Stainless Steel
89841-9	0-35,000	Stainless Steel

MUFFLERS

Single chamber mufflers effectively reduce exhaust air noise. The 89853 muffler is installed in the exhaust air port of the S-216 series hydraulic pumps and S-85-JN series gas boosters. The small size 89853-1 muffler serves as an air filter in the air cylinder vent port of the gas boosters. The large 89853-5 muffler is installed in the two exhaust air ports of the S-218 series pumps.

Part Number	Pipe Thread	Length		Diameter		Weight	
		inch	cm	inch	cm	lbs.	kg
89853	1/2 NPT	5-1/2	14.0	3-1/4	8.3	.62	.28
89853-1	1/4 NPT	1-3/4	4.5	9/16	1.4	.14	.06
89853-5	1-1/2 NPT	13-1/4	33.7	5-1/8	13.0	4.0	1.8

AIR CONTROL UNIT (FRL)

The 80617 FRL Unit delivers filtered-lubricated compressed air at controlled pressures to operate cylinder, pumps or air tools. Is standard equipment for all Sprague Products “C” or “J” series lubricated hydraulic or pneumatic power units.

Part No.	Part Name
80617	Air Control Unit Assy.—3/8 NPT
81456	Filter—1/3 Pint, Metal
81457	Regulator—Relieving Type
81458	Lubricator—1/3 Pint, Transparent
80648	Gauge, 0-160 psi, 2 inch Dial

ACCESSORIES

HIGH PRESSURE HOSE ASSEMBLY

Hose assembly (1/4 inch [6.35 mm] I.D.) for oil or gas is rated at 10,000 psi operating pressure with a 40,000 psi minimum burst pressure. Capable of continuous service from -40° to 200°F (-40° to 95°C). Has 3/8 NPT male fitting and 6 inch (15.2 cm) hose guard at each end. Supplied with 3/8 NPT high pressure, quick disconnect coupler.

Part No.	Hose Length	
	Feet	Meter
89514-72	6	1.8
89514-120	10	3.0
89514-300	25	7.6
89514-600	50	15.2

High Pressure Manifold – Gauge and Bleed Connection Type

Part Number	A Port Thread	B Port Thread	Mat'l	Maximum Oper. Press.	
				Pneu. psi	Hydr. psi
88492-2	3/8 NPT	1/4 NPT	SS	10000	10000
94002	9/16-18 NBS	9/16-18 NBS	SS	30000	40000

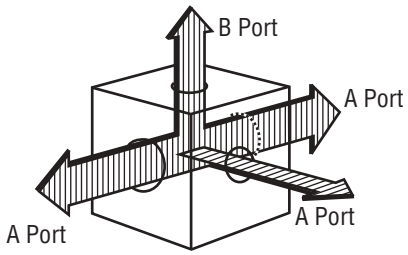

88492
89254

P-100-HP-ASSY2
High Pressure Sub-Assembly

This H.P. sub-assembly provides all parts needed to connect from the pump to your work for pressures over 10,000 psig to 60,000 psig. Included are H.P. nipples, GLN-60-4H glands,COL-60-4 collars,PLG-60-4 plug, manifold and a Needle Valve.

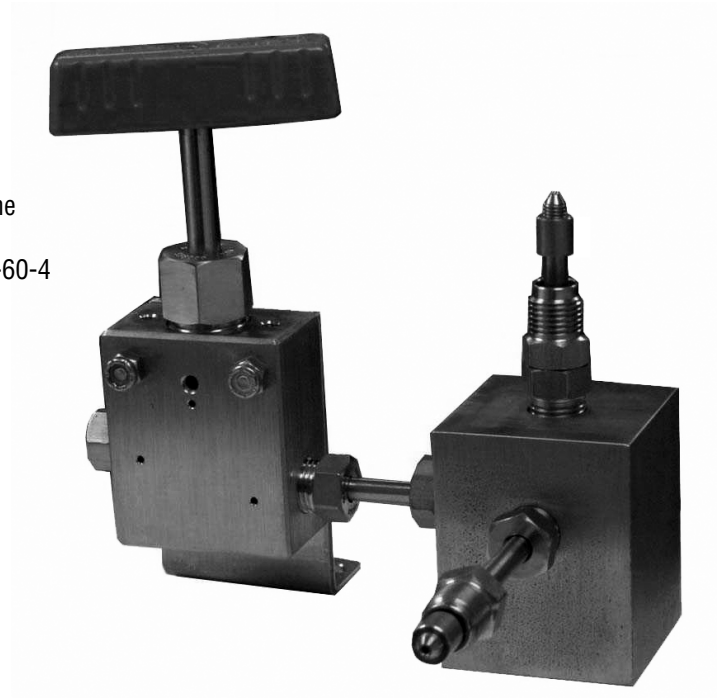

GENERAL INFORMATION

SAFETY ⚠

Hydraulic and pneumatic components can be hazardous when used beyond their functional limitations. Never exceed specified operating pressure temperature range, media compatibility, etc. Any disassembly and improper reassembly of assemblies or subassemblies may result in accidental death or serious bodily injury.

DIMENSIONS AND WEIGHTS

Dimensions and weights shown in this catalog are nominal envelope dimensions and approximate weights for installation and shipping purposes, and are subject to change without notice. Should dimensional tolerances or weights be of concern regarding your particular application, consult the Factory Technical Department.

Also from Sprague Products

PowerStar™ 4B Gas Boosters

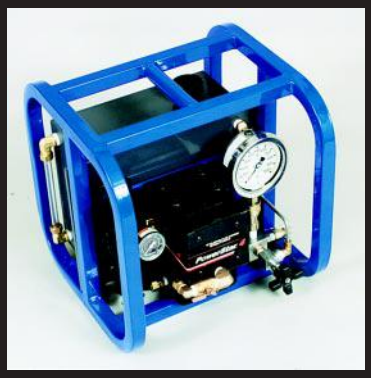

Advanced Air Driven
Power Units

Advanced Air Driven
Power Units

PowerStar™ 4 Advanced
Air Driven Air Amplifiers

PowerStar™ 4 Advanced
Air Driven Pump System

High Pressure Equipment
Sprague® Products

2955 W. 17th Street • Erie, Pennsylvania 16505 U.S.A.
Phone: (814) 838-2028 • 1-800-289-7447
Fax: (814) 838-6075 • E-Mail: sales@highpressure.com
www.HighPressure.com

© 2017 High Pressure Equipment Company
Printed in U.S.A.